VDC Civic 500 DB

Module of vertical duct connection

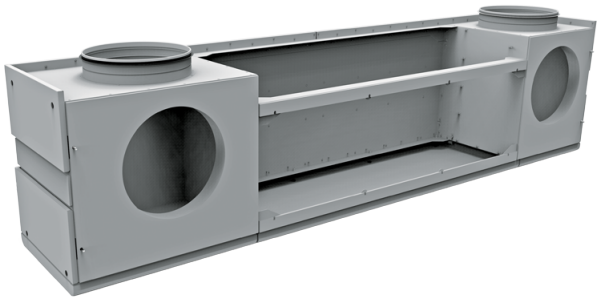

	Unit of measurement	VDC Civic 500 DB

Dimensions