

# S-Vent 450x203-11,0-4D-R90

Radial fans

- Impeller type: Centrifugal impeller with forward curved blades
- Casing material: Coated steel

| | Unit of measurement | S-Vent 450x203-11,0-4D-R90 |
|---|---|---|
| Phases | - | 3 |
| Maximum supply voltage | V | 400 |
| Minimum supply voltage | V | 400 |
| Power supply frequency | Hz | 50 |
| Maximum airflow | m³/h | 19000 |
| Weight | kg | 105 |
| Transported air temperature (max) | °C | 60 |
| Ingress protection rating | - | IP54 |
| Ingress protection rating of the drive | - | IP54 |
| Impeller material | - | Galvanized steel |

## Dimensions

| Ø D | Ø d | Ø D1 | B | H | H1 | H2 | L | L1 | L2 | P | M | I | G | K | S |
|---|---|---|---|---|---|---|---|---|---|---|---|---|---|---|---|
| 450 | 10 | 15 | 774 | 1005 | 345 | 306 | 722 | 352 | 315 | 371 | 450 | 608 | 42 | 530 | 178 |

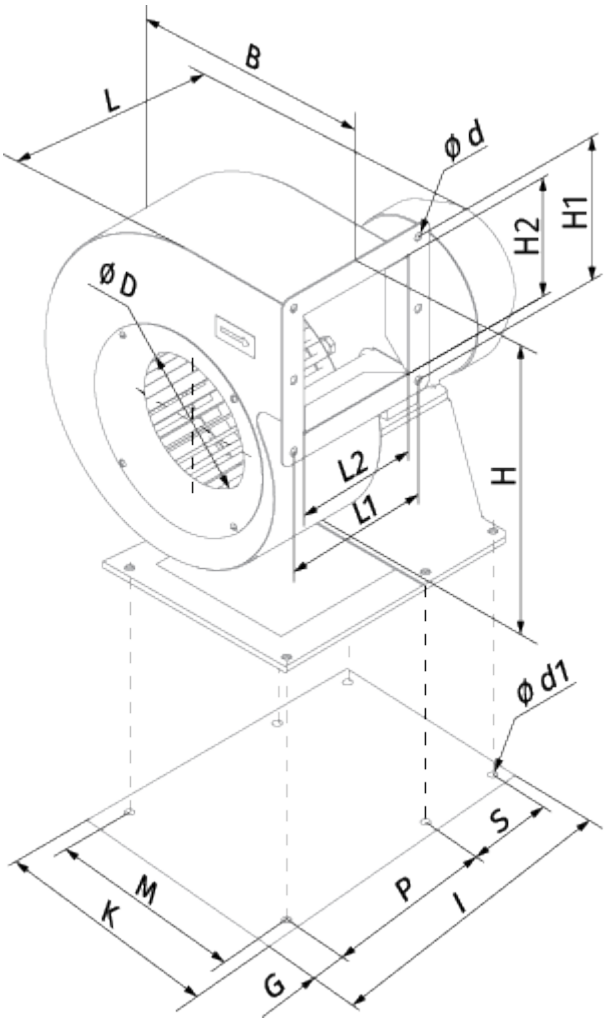
B
L
ø d
H2
H1
ø D
L2
L1
H
ø d1
S
M
K
P
I
G