

# Reneo-Fit D 150 R S21

Heat and energy recovery air handling units

- Heat exchanger type: Counter flow
- Heat exchanger material: Polystyrene
- Sound-insulated casing
- Bypass: Auto
- Reheater: Optional
- Preheater: Optional
- BMS protocol: ModBus
- Control: Smartphone
- Casing material: EPP
- Humidity sensor: Optional
- CO2 sensor: Optional
- PM2.5 sensor: Optional

| | Unit of measurement | Reneo-Fit D 150 R S21 |
|---|---|---|
| Phases | - | 1 |
| Maximum supply voltage | V | 230 |
| Minimum supply voltage | V | 230 |
| Power supply frequency | Hz | 50/60 |
| Maximum airflow | m³/h | 229 |
| Heat recovery efficiency, max | % | 89 |
| Heat exchanger type | - | Counter flow |
| Heat exchanger material | - | Polystyrene |
| Weight | kg | 18 |
| Transported air temperature (max) | °C | 40 |
| Transported air temperature (min) | °C | -25 |
| Ambient air temperature min | °C | 1 |
| Ambient air temperature max | °C | 40 |
| Ingress protection rating | - | IP22 |
| Ambient air humidity max | % | 60 |
| Ingress protection rating of the drive | - | IP44 |

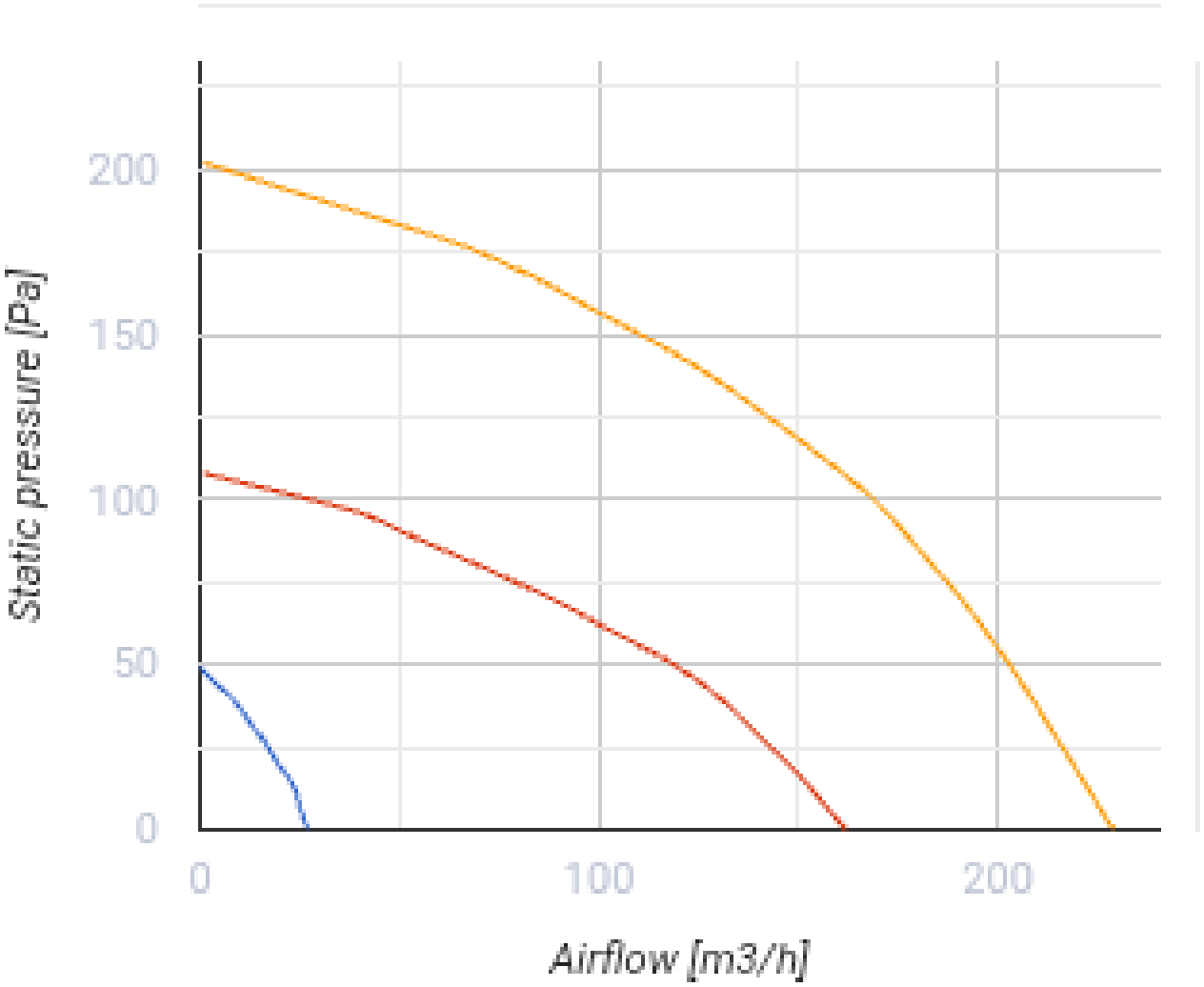


## Dimensions

| Ø D | Ø D1 | H | L | L1 | W | W1 | W2 | W3 |
|---|---|---|---|---|---|---|---|---|
| 160 | 125 | 242 | 1160 | 685 | 683 | 642 | 610 | 521 |

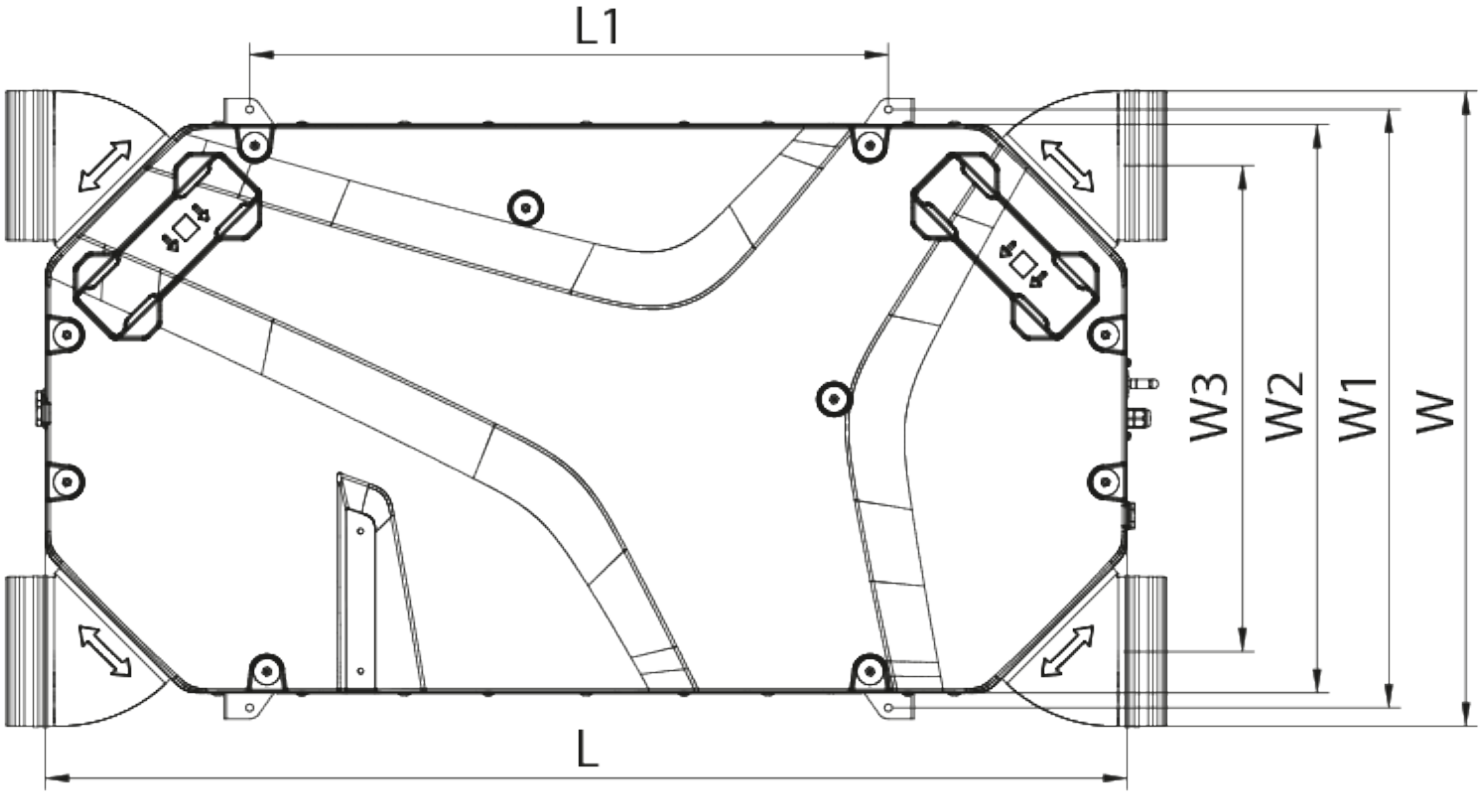
L1
W3
W2
W1
W
L

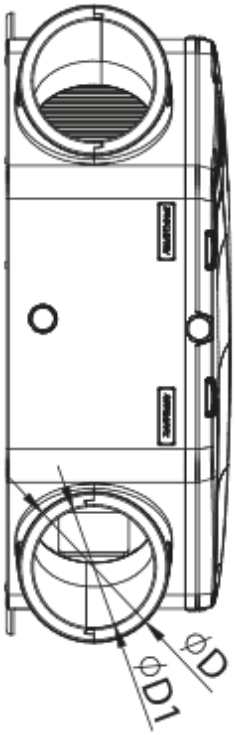
ØD
ØD1

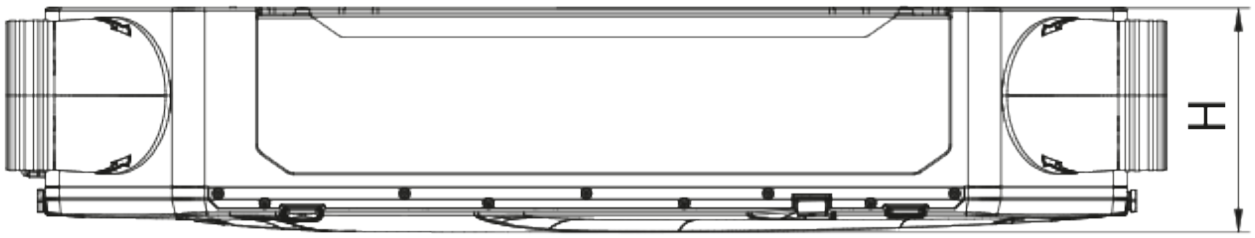
H

## Ecodesign

| Trademark | Blauberg | | | | | |
|---|---|---|---|---|---|---|
| Model | Reneo-Fit D 150 R S21 | | | | | |
| Specific energy consumption (SEC) (kWh/(m²/a)) | Cold | | Average | | Warm | |
| | -81.6 | A+ | -43.1 | A+ | -18.4 | E |
| Type of ventilation unit | Bidirectional | | | | | |
| Type of drive installed | Variable speed | | | | | |
| Type of heat recovery system | Recuperative | | | | | |
| Thermal efficiency of heat recovery (%) | 85 | | | | | |
| Maximum flow rate (m³/h) | 168 | | | | | |
| Electric power input (W) | 64 | | | | | |
| Reference flow rate (m³/s) | 0.033 | | | | | |
| Reference pressure difference (Pa) | 50 | | | | | |
| Specific power input (SPI) (W/(m³/h)) | 0.18 | | | | | |
| Control typology | Local demand control | | | | | |
| Maximum internal leakage rates (%) | 2.7 | | | | | |
| Maximum external leakage rates (%) | 2.7 | | | | | |
| Sound power level (dB(A)) | 48 | | | | | |
| The annual electricity consumption (AEC) (kWh/a) | Cold | | Average | | Warm | |
| | 677 | | 140 | | 95 | |
| The annual heating saved (AHS) (kWh/a) | Cold | | Average | | Warm | |
| | 8979 | | 4590 | | 2075 | |

## Accessories

### Condensation drainage

| Name | Photo | Description |
|---|---|---|
| SFK 20x32 |  | Hydraulic syphon for condensate drainage |

### Electrical heaters

| Name | Photo | Description |
|---|---|---|

| | | |
|---|---|---|
| EVH 160-0.8-1 S21 V.2 |  | Electric duct preheater for heat exchanger freeze protection |
| EVH 160-1.2-1 S21 V.2 |  | Electric duct preheater for heat exchanger freeze protection |
| EVH 160-1.7-1 S21 V.2 |  | Electric duct preheater for heat exchanger freeze protection |
| EVH 160-2.0-1 S21 V.2 |  | Electric duct preheater for heat exchanger freeze protection |

### Control Panels

| Name | Photo | Description |
|---|---|---|
| S25 |  | LCD control panel |
| S22 |  | Control panels |
| S22 Wi-Fi |  | Control panels |

### CO2 sensors

| Name | Photo | Description |
|---|---|---|
| CD-1 |  | CO2 sensors |
| CD-2 |  | CO2 sensors |

### Humidity sensors

| Name | Photo | Description |
|---|---|---|
| FS2 |  | Humidity sensor |

### Other accessories

| Name | Photo | Description |
|---|---|---|

| | | |
|---|---|---|
| FP 200x165x48 ePM1 60% F7 |  | F7 panel filter |
| FP 200x165x48 Coarse 90% G4 |  | G4 panel filter |

### Electric actuators

| Name | Photo | Description |
|---|---|---|
| Belimo TF230 |  | Electric actuators |