

Primo EC 150

Mixed-flow inline fans with EC-motors

- Impeller type: Mixed-flow
- Casing material: Polypropylene
- Installation in any position

	Unit of measurement	Primo EC 150
Phases	-	1
Minimum supply voltage	V	230
Maximum supply voltage	V	230
Power supply frequency	Hz	50/60
Maximum airflow	m^3/h	700
Transported air temperature (max)	°C	55
Transported air temperature (min)	°C	-25
Ingress protection rating	-	IPX4
Ingress protection rating of the drive	-	IP44
Impeller material	-	Plastic

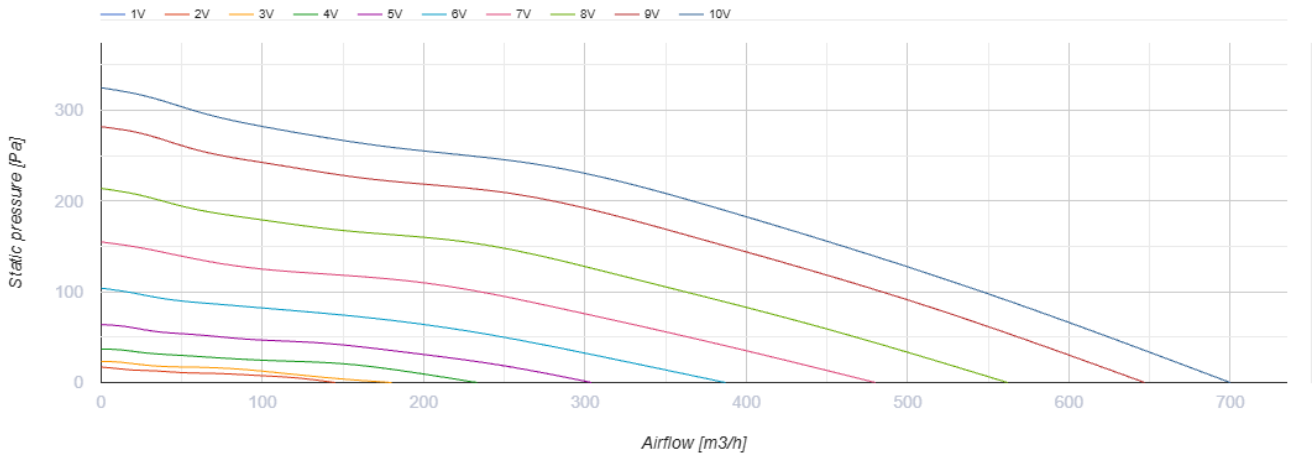

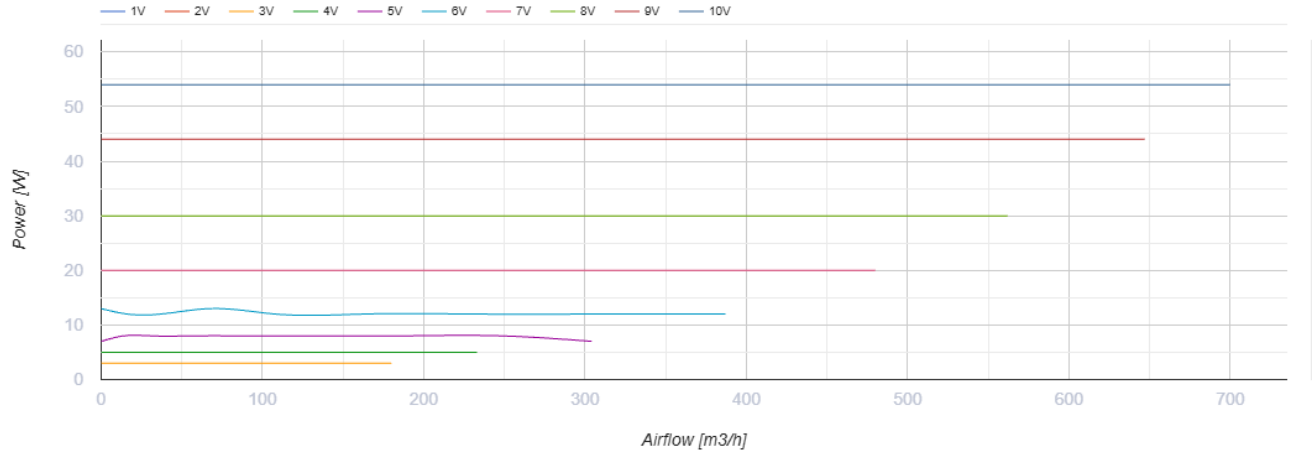

Dimensions

A	B	C	Ø D
267	301	247	150

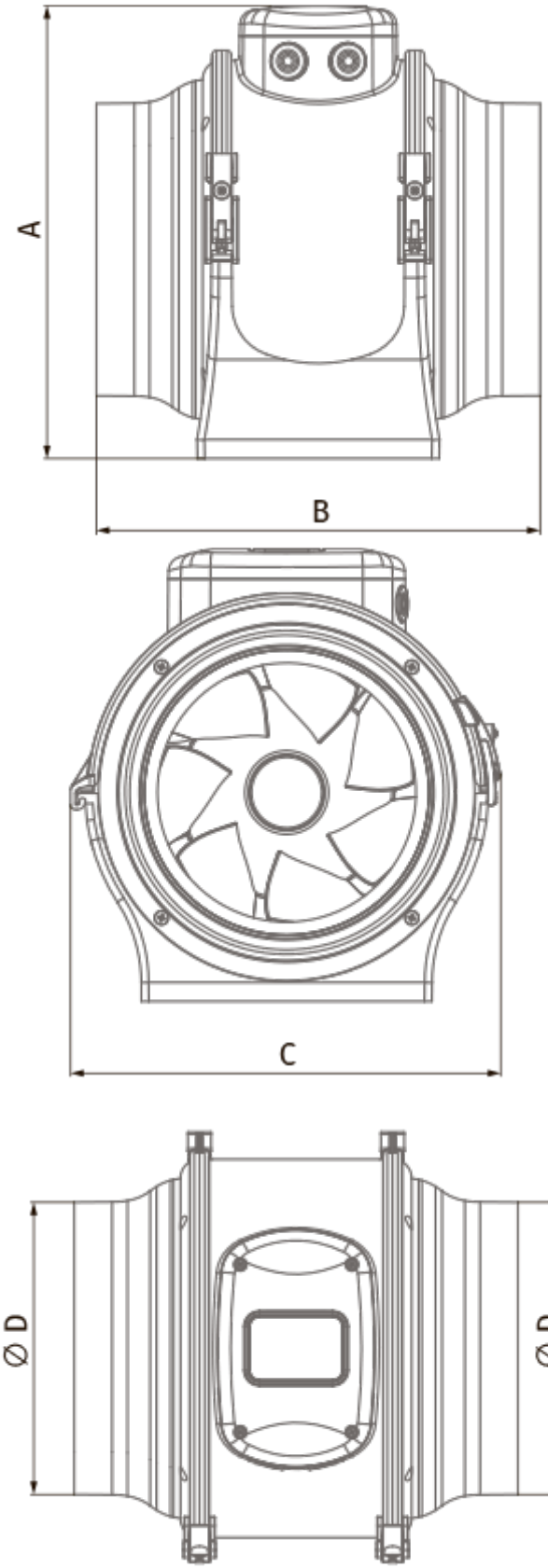
A
B
C
∅ D
∅ D

Ecodesign

Trademark	Blauberg
Model	Primo EC 150
Type of ventilation unit	Unidirectional
Type of drive installed	Integrated VSD
Type of heat recovery system	None
Nominal external pressure (Pa)	188
Maximum external leakage rates (%)	2.7
Static efficiency (%)	38.5
Declared typology	NRVU UVU
Effective electric power input (kW)	0.054
Sound power level (dB(A))	59

Accessories

Fittings

Name	Photo	Description
K 150		Clamp for round flexible ducts