

KSZ 100

Cross joint for round duct

- Casing material: Galvanized steel

	Unit of measurement	KSZ 100

Dimensions

Ø D1	Ø D2	L
100	100	190

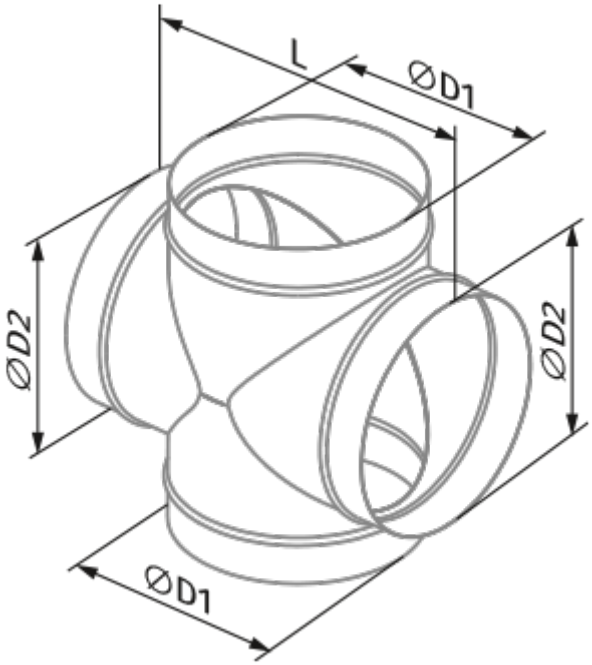
L
ØD1
ØD2
ØD2
ØD1