

KOMFORT Roto EC LW 2000-2 S18

Air handling units with rotary heat exchanger

- Heat exchanger type: Rotary
- Heat exchanger material: Aluminum
- Sound-insulated casing
- Reheater: Water
- Control: Wired control panel
- Casing material: Aluzinc steel
- Humidity sensor: Optional
- CO2 sensor: Optional
- PM2.5 sensor: Optional

	Unit of measurement	KOMFORT Roto EC LW 2000-2 S18
Phases	-	1
Minimum supply voltage	V	230
Maximum supply voltage	V	230
Power supply frequency	Hz	50/60
Maximum airflow	m³/h	2250
Heat recovery efficiency, max	%	93
Heat exchanger type	-	Rotary
Heat exchanger material	-	Aluminum
Weight	kg	198
Transported air temperature (max)	°C	40
Transported air temperature (min)	°C	-25
Ambient air temperature min	°C	1
Ambient air temperature max	°C	40
Ingress protection rating	-	IP22
Ingress protection rating of the drive	-	IP44
Ambient air humidity max	%	80

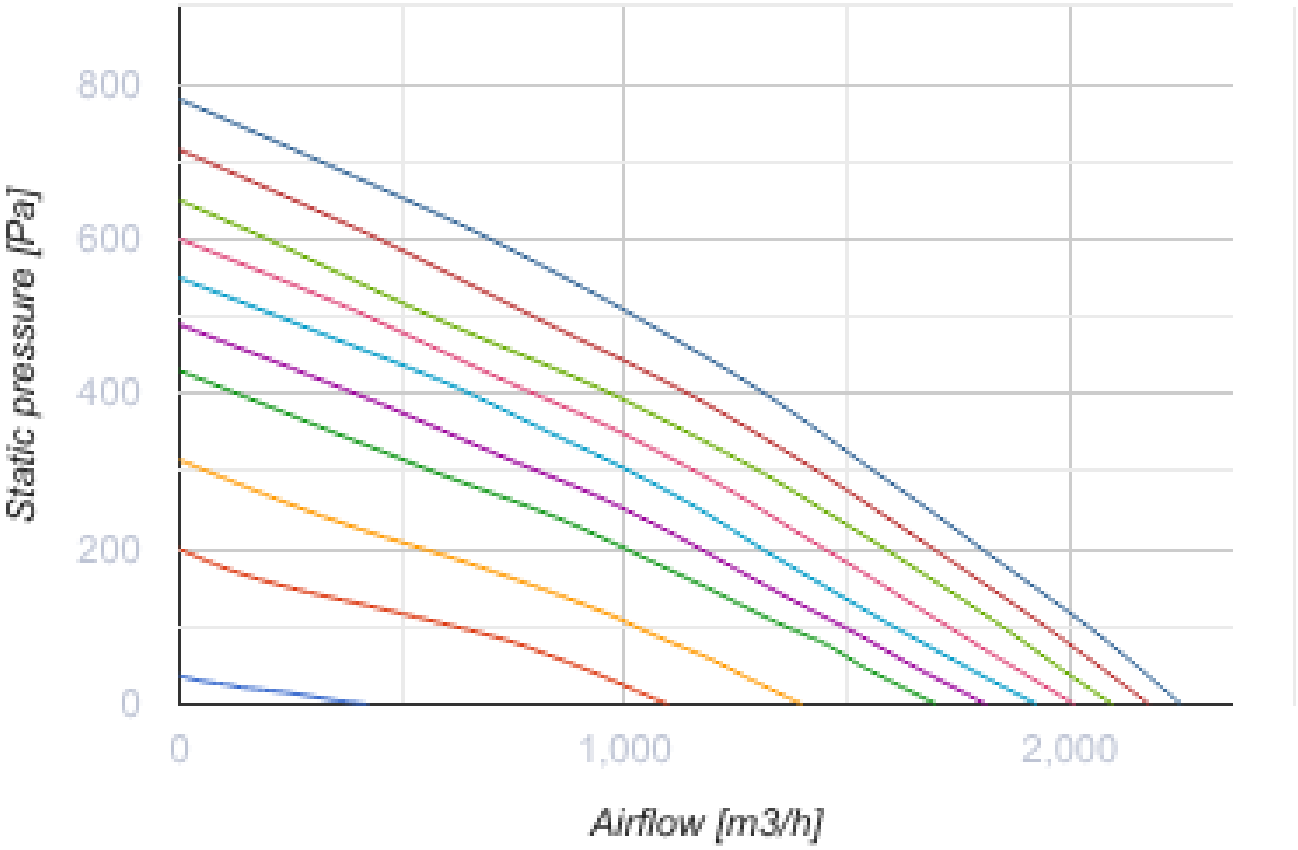
800
600
400
200
0
Static pressure [Pa]
0
1,000
2,000
Airflow [m3/h]

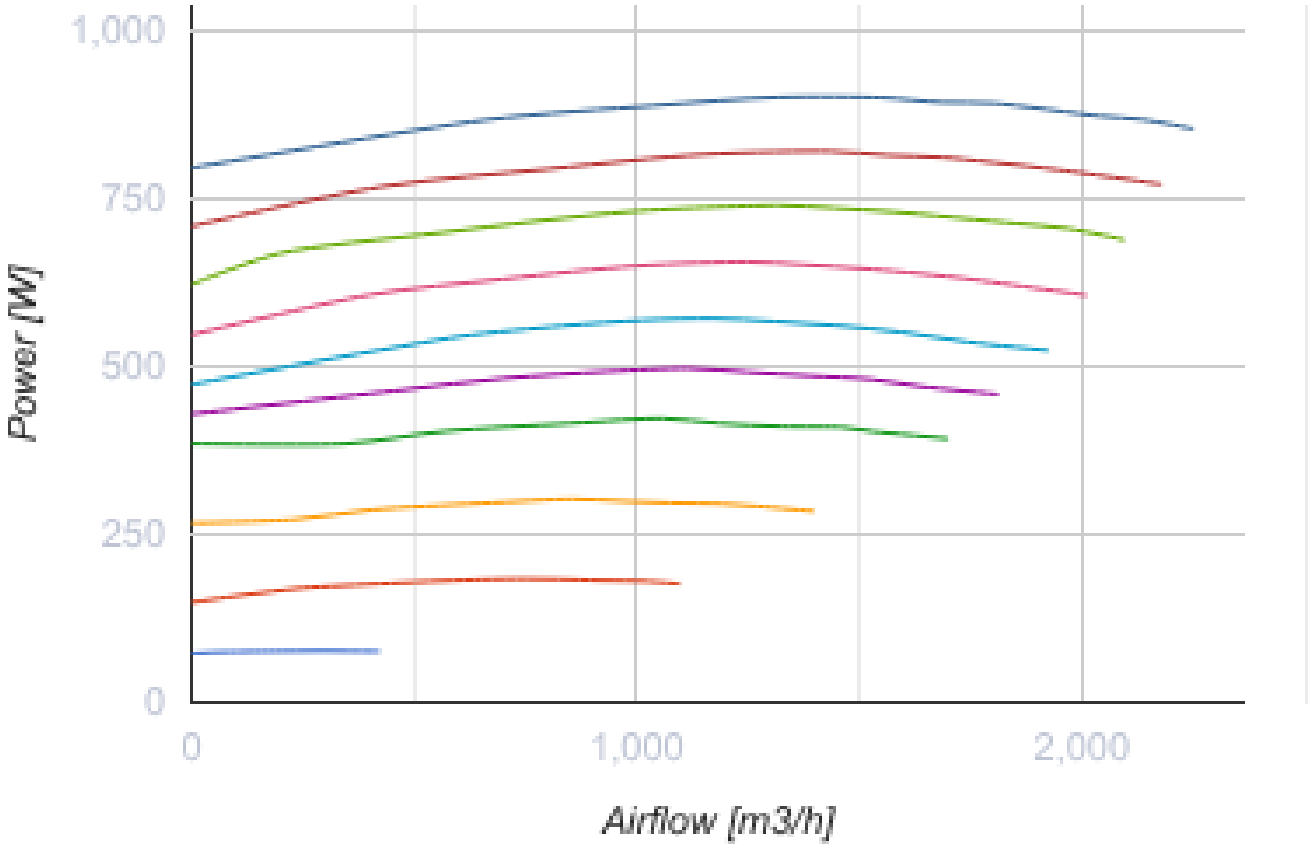

Dimensions

B	B1	H	L	X	Y
875	630	1010	1485	500	300

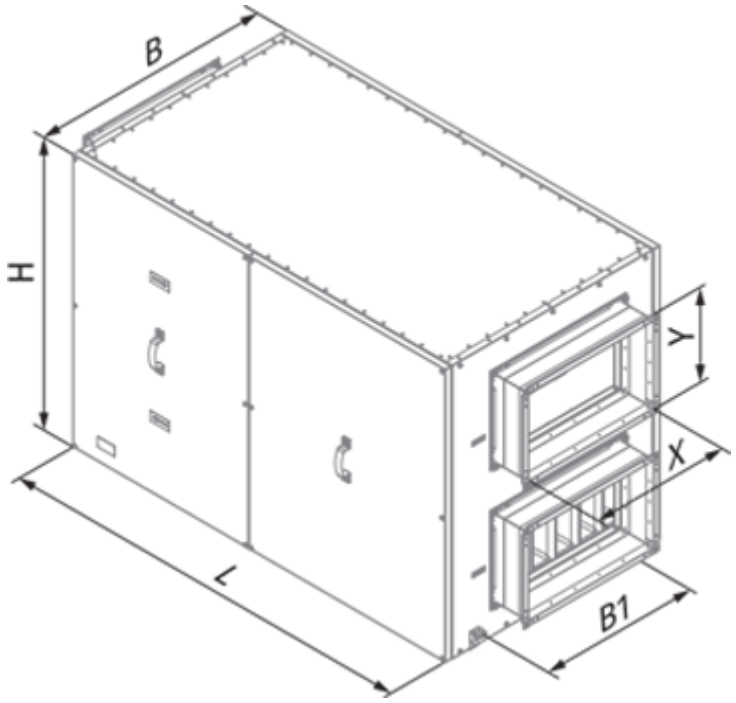

Accessories

Humidity sensors

Name	Photo	Description
FS2		Humidity sensor

Other accessories

Name	Photo	Description
FP 800x477x47 G4		G4 panel filter
FPT 800x477x27 G4		