

KOMFORT Roto EC LE 1000-4.5 S18

Air handling units with rotary heat exchanger

- Power of electrical reheater: 4500
- Heat exchanger type: Rotary
- Heat exchanger material: Aluminum
- Sound-insulated casing
- Reheater: Electric
- Control: Wired control panel
- Casing material: Aluzinc steel
- Humidity sensor: Optional
- CO2 sensor: Optional
- PM2.5 sensor: Optional

	Unit of measurement	KOMFORT Roto EC LE 1000-4.5 S18
Phases	-	3
Minimum supply voltage	V	400
Maximum supply voltage	V	400
Power supply frequency	Hz	50/60
Power of electrical reheater	W	4500
Maximum airflow	m³/h	900
Heat recovery efficiency, max	%	95
Heat exchanger type	-	Rotary
Heat exchanger material	-	Aluminum
Weight	kg	130
Transported air temperature (max)	°C	40
Transported air temperature (min)	°C	-25
Ambient air temperature min	°C	1
Ambient air temperature max	°C	40
Ingress protection rating	-	IP22
Ingress protection rating of the drive	-	IP44
Ambient air humidity max	%	80

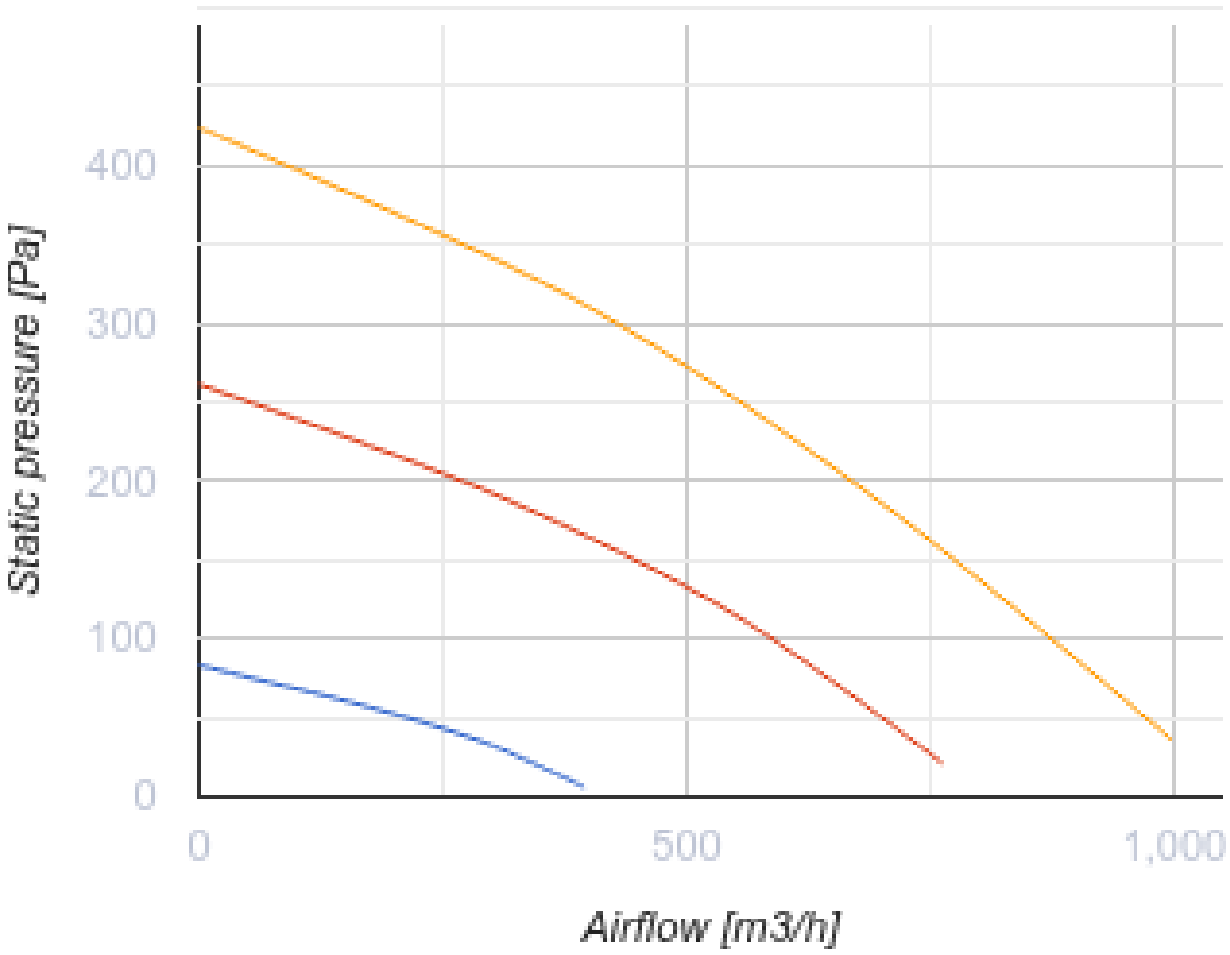

Dimensions

ØD	B	B1	H	L
249	745	580	700	1210

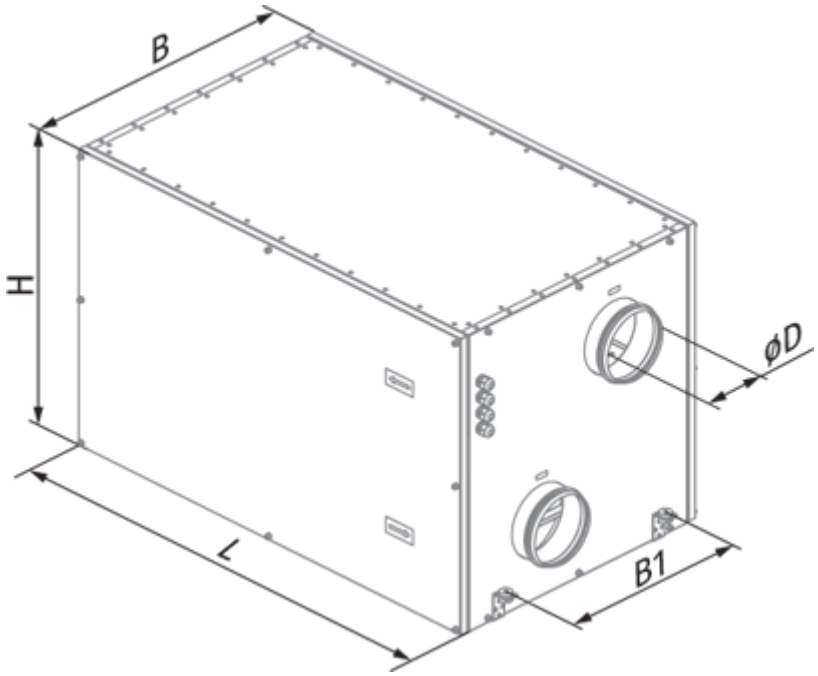

Accessories

Humidity sensors

Name	Photo	Description
FS2		Humidity sensor

Other accessories

Name	Photo	Description
FP 700x332x48 G4		G4 panel filter
FPT 700x333x27 G4		