

KOMFORT EC LBE 700-E S21

Heat recovery air handling units

- Power of electrical reheater: 3600
- Heat exchanger type: Counter flow
- Heat exchanger material: Enthalpy
- Sound-insulated casing
- Enthalpy heat exchanger
- Bypass: Auto
- Reheater: Electric
- Preheater: Optional
- BMS protocol: ModBus
- Control: Smartphone
- Casing material: Aluzinc
- Humidity sensor: Optional
- CO2 sensor: Optional
- PM2.5 sensor: Optional

	Unit of measurement	KOMFORT EC LBE 700-E S21
Phases	-	1
Minimum supply voltage	V	230
Maximum supply voltage	V	230
Power supply frequency	Hz	50/60
Power of electrical reheater	W	3600
Maximum airflow	m³/h	830
Heat recovery efficiency, max	%	89
Heat exchanger type	-	Counter flow
Heat exchanger material	-	Enthalpy
Weight	kg	108.4
Transported air temperature (max)	°C	40
Transported air temperature (min)	°C	-25
Ambient air temperature min	°C	1
Ambient air temperature max	°C	40
Ingress protection rating	-	IP22
Ingress protection rating of the drive	-	IP44
Ambient air humidity max	%	60

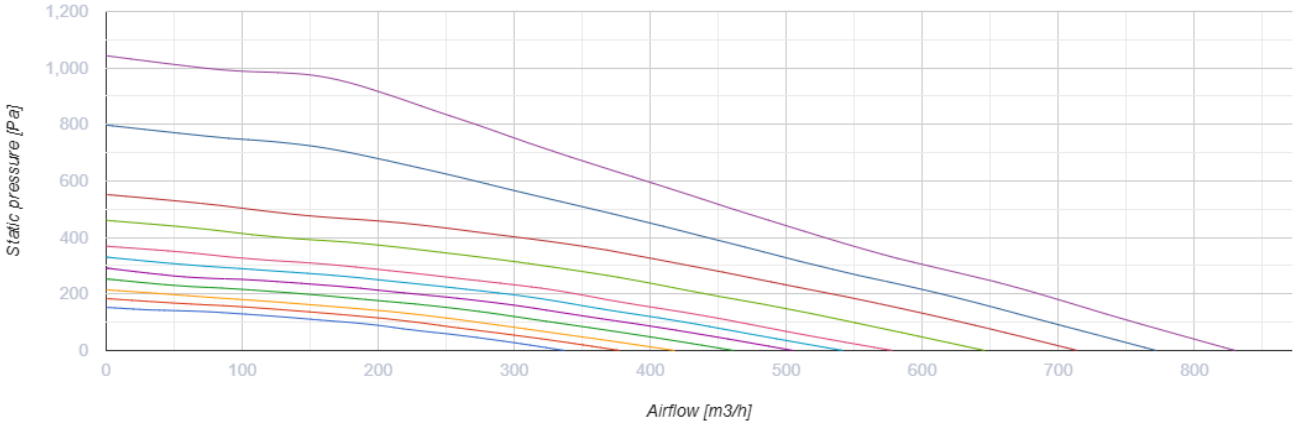

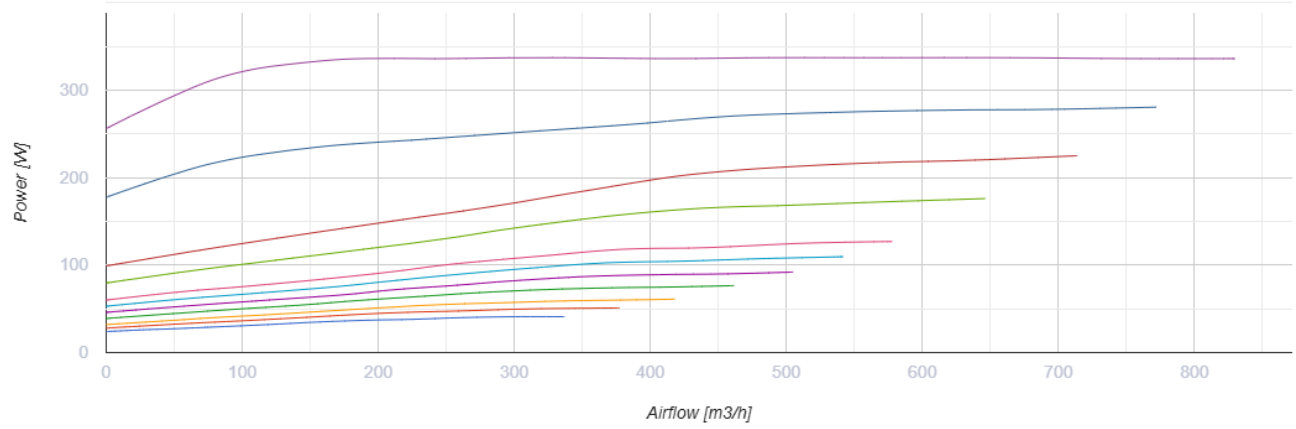

Dimensions

Ø D	B	B1	H	L	L1
247	866	700	601	1282	1379

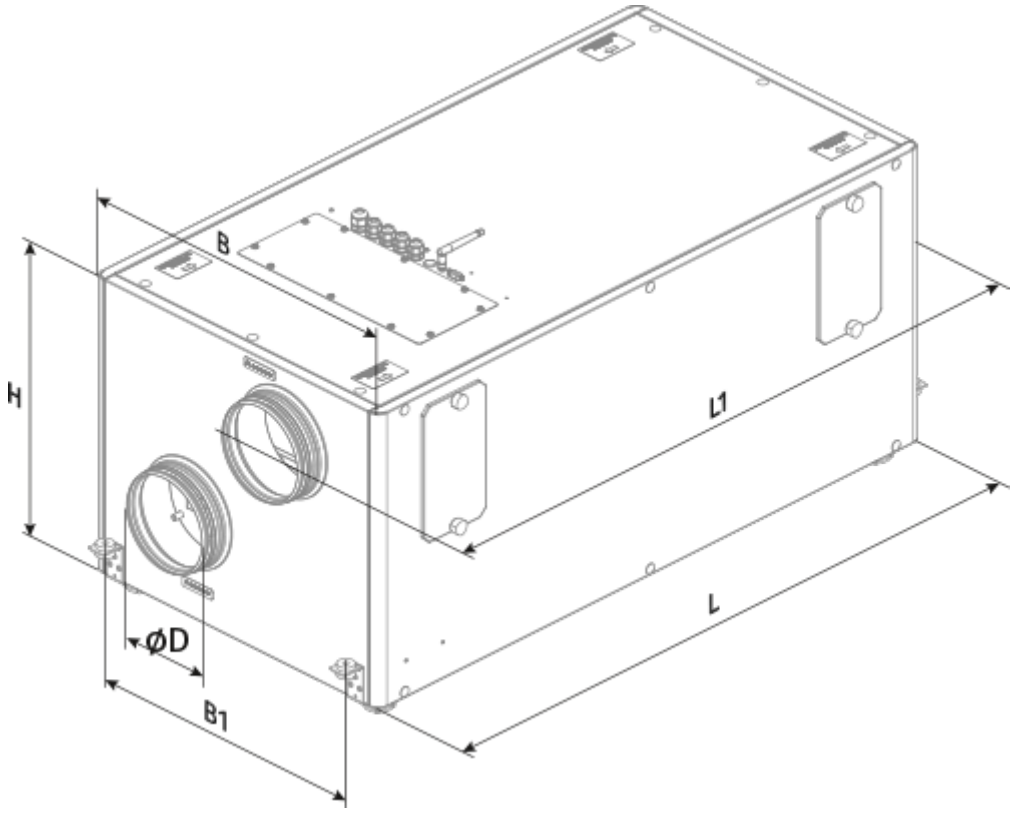
B
H
L1
L
ØD
B1

Ecodesign

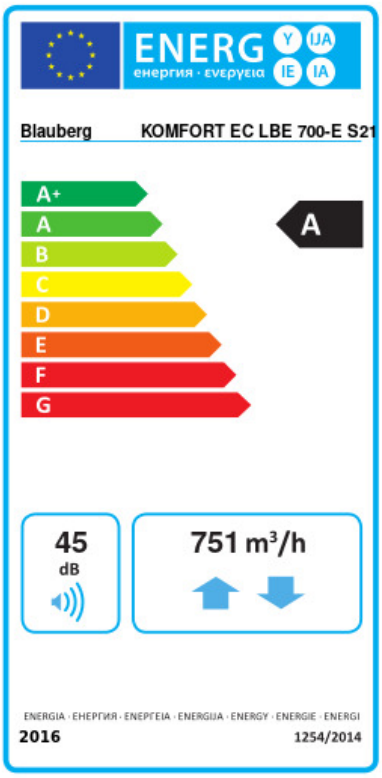

Trademark	Blauberg					
Model	KOMFORT EC LBE 700-E S21					
Specific energy consumption (SEC) (kWh/(m²/a))	Cold		Average		Warm	
	-77.9	A+	-40.8	A	-16.9	E
Type of ventilation unit	Bidirectional					
Type of drive installed	Variable speed					
Type of heat recovery system	Recuperative					
Thermal efficiency of heat recovery (%)	78					
Maximum flow rate (m³/h)	751					
Electric power input (W)	336					
Reference flow rate (m³/s)	0.143					
Reference pressure difference (Pa)	50					
Specific power input (SPI) (W/(m³/h))	0.243					
Control typology	Local demand control					
Maximum internal leakage rates (%)	2.7					
Maximum external leakage rates (%)	2.7					
Declared typology	RVU BVU					
Sound power level (dB(A))	45					
The annual electricity consumption (AEC) (kWh/a)	Cold		Average		Warm	
	710		173		128	
The annual heating saved (AHS) (kWh/a)	Cold		Average		Warm	
	8695		4445		2010	

Accessories

Electrical heaters

Name	Photo	Description
EVH 250-1.2-1 S21 V.2		Electric duct preheater for heat exchanger freeze protection
EVH 250-2.0-1 S21 V.2		Electric duct preheater for heat exchanger freeze protection

EVH 250-3.0-1 S21 V.2		Electric duct preheater for heat exchanger freeze protection

Condensation drainage

Name	Photo	Description
CP-2		Drain pump

Control Panels

Name	Photo	Description
S25		LCD control panel
S22		Control panels
S22 Wi-Fi		Control panels

CO2 sensors

Name	Photo	Description
CD-1		CO2 sensors
CD-2		CO2 sensors

Humidity sensors

Name	Photo	Description
FS2		Humidity sensor

Other accessories

Name	Photo	Description

FP 784x253x48 F7		F7 panel filter
FP 784x253x48 G4		G4 panel filter

Electric actuators

Name	Photo	Description
Belimo TF230		Electric actuators