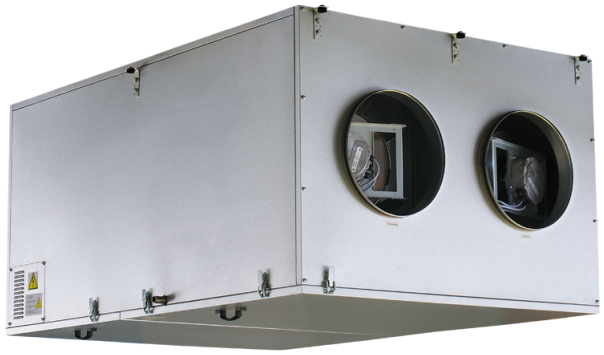

KOMFORT EC DBW 2000 S21 DTV

Suspended heat recovery air handling units

- Heat exchanger type: Cross flow
- Heat exchanger material: Aluminum
- Sound-insulated casing
- Bypass: Auto
- Reheater: Water
- BMS protocol: ModBus
- Control: Smartphone
- Casing material: Aluzinc
- Humidity sensor: Optional
- CO2 sensor: Optional
- PM2.5 sensor: Optional

	Unit of measurement	KOMFORT EC DBW 2000 S21 DTV
Phases	-	1
Minimum supply voltage	V	230
Maximum supply voltage	V	230
Power supply frequency	Hz	50/60
Maximum airflow	m³/h	2100
Heat recovery efficiency, max	%	67
Heat exchanger type	-	Cross flow
Heat exchanger material	-	Aluminum
Weight	kg	140
Transported air temperature (max)	°C	40
Transported air temperature (min)	°C	-25
Ambient air temperature min	°C	1
Ambient air temperature max	°C	40
Ingress protection rating	-	IP22
Ambient air humidity max	%	60
Ingress protection rating of the drive	-	IP44

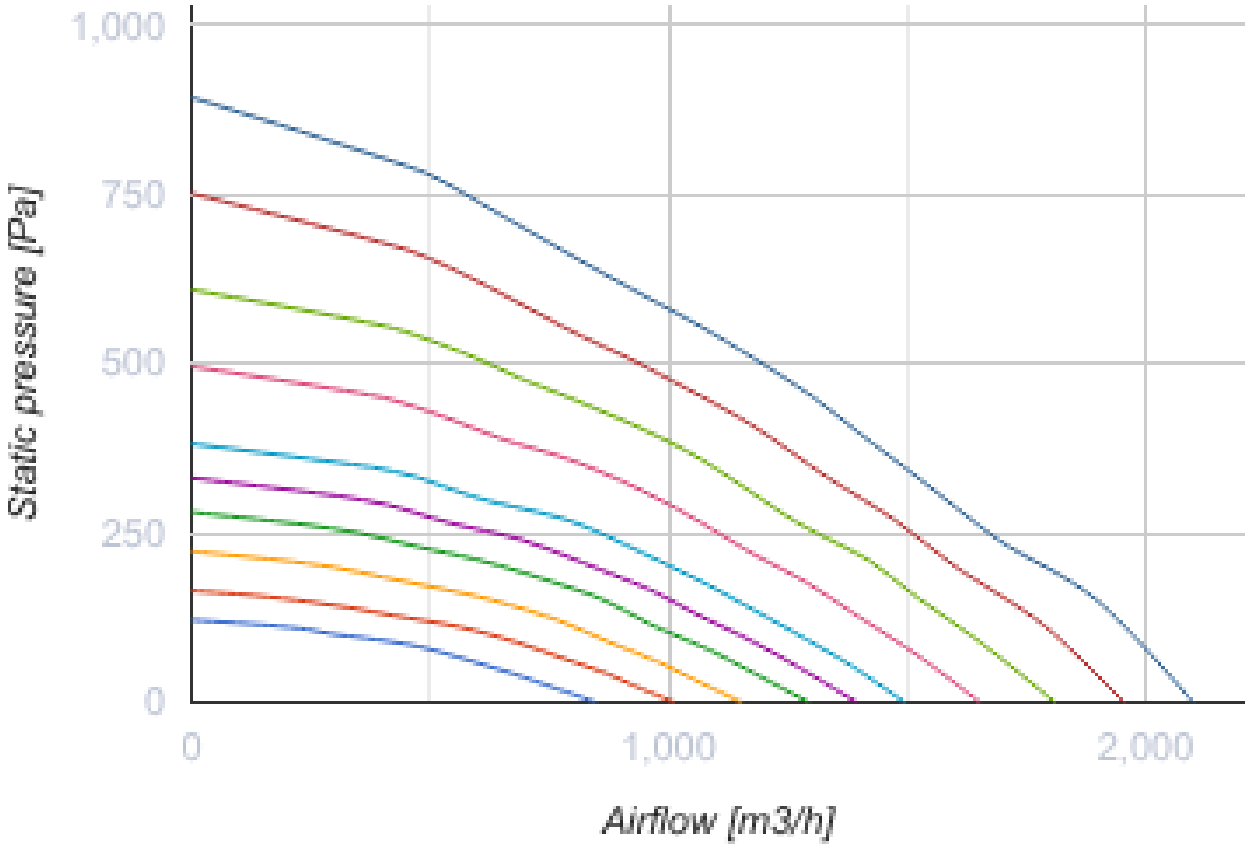
1,000
750
500
250
0
Static pressure [Pa]
0
1,000
2,000
Airflow [m3/h]

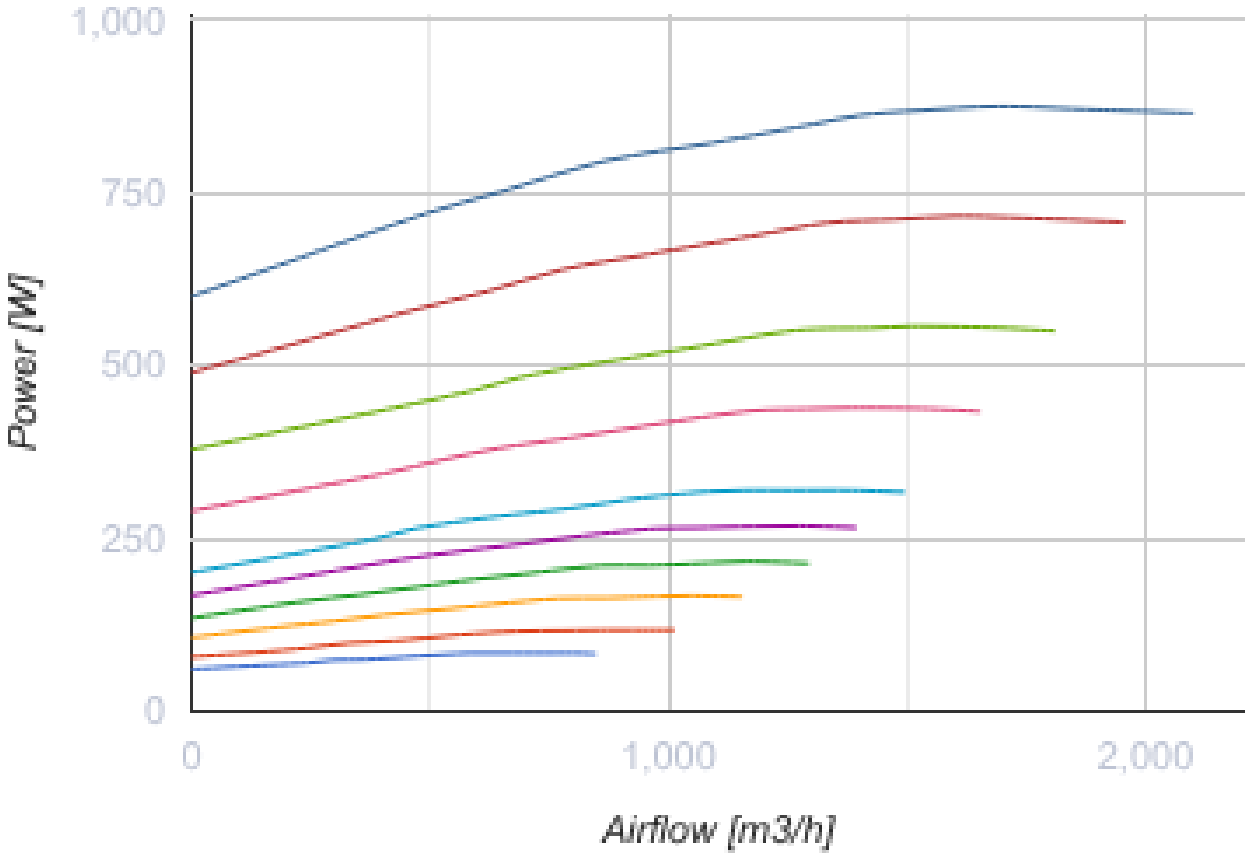

Dimensions

Ø D	B	H	L	L1
315	950	761	1400	1453

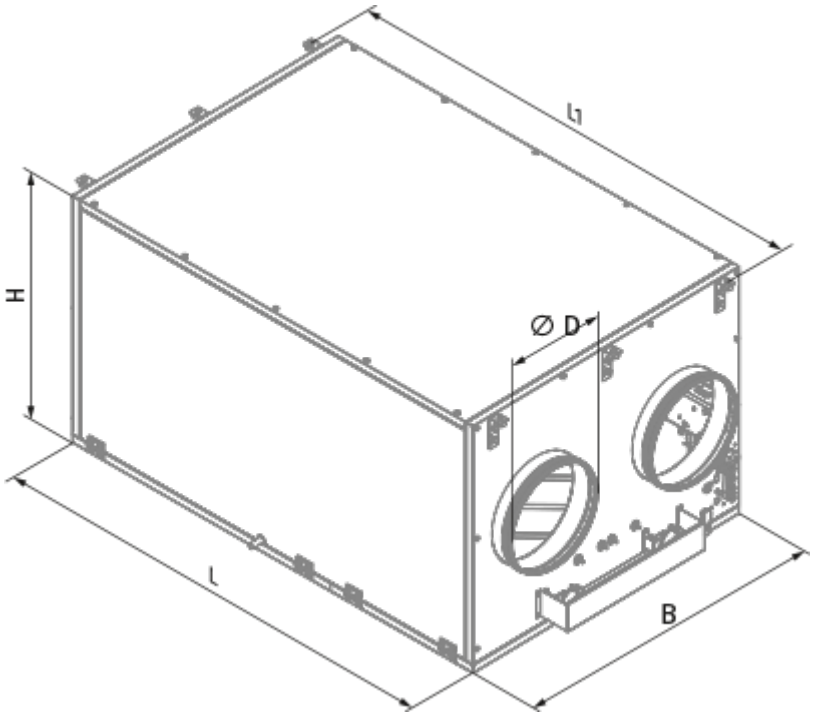

Accessories

Condensation drainage

Name	Photo	Description
SFK 20x32		Hydraulic syphon for condensate drainage

Control Panels

Name	Photo	Description
S25		LCD control panel
S22		Control panels
S22 Wi-Fi		Control panels

CO2 sensors

Name	Photo	Description
CD-1		CO2 sensors

CD-2		CO2 sensors

Humidity sensors

Name	Photo	Description
FS2		Humidity sensor

Other accessories

Name	Photo	Description
FP 708x480x48 G4		G4 panel filter

Electric actuators

Name	Photo	Description
Belimo TF230		Electric actuators