

Iso-V EC 450

Centrifugal inline fans in sound-insulated casings with EC-motors

- Sound-insulated casing
- Impeller type: Centrifugal impeller with backward curved blades
- Casing material: Galvanized steel
- Installation in any position

	Unit of measurement	Iso-V EC 450
Phases	-	1
Minimum supply voltage	V	200
Maximum supply voltage	V	277
Power supply frequency	Hz	50/60
Maximum airflow	m³/h	6800
Weight	kg	46.3
Transported air temperature (max)	°C	60
Transported air temperature (min)	°C	-25
Ingress protection rating	-	IPX4
Impeller material	-	Plastic

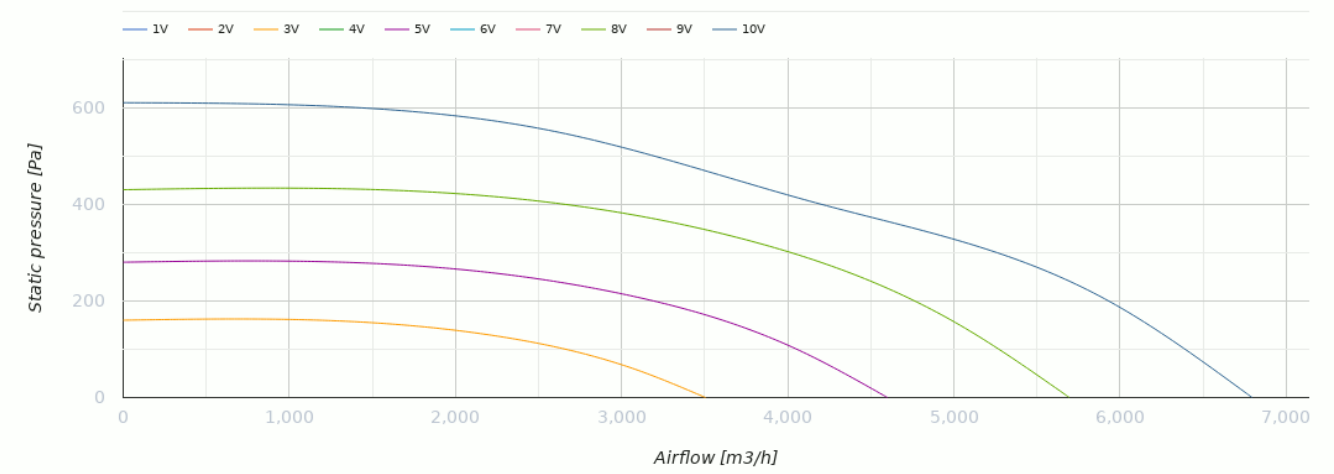

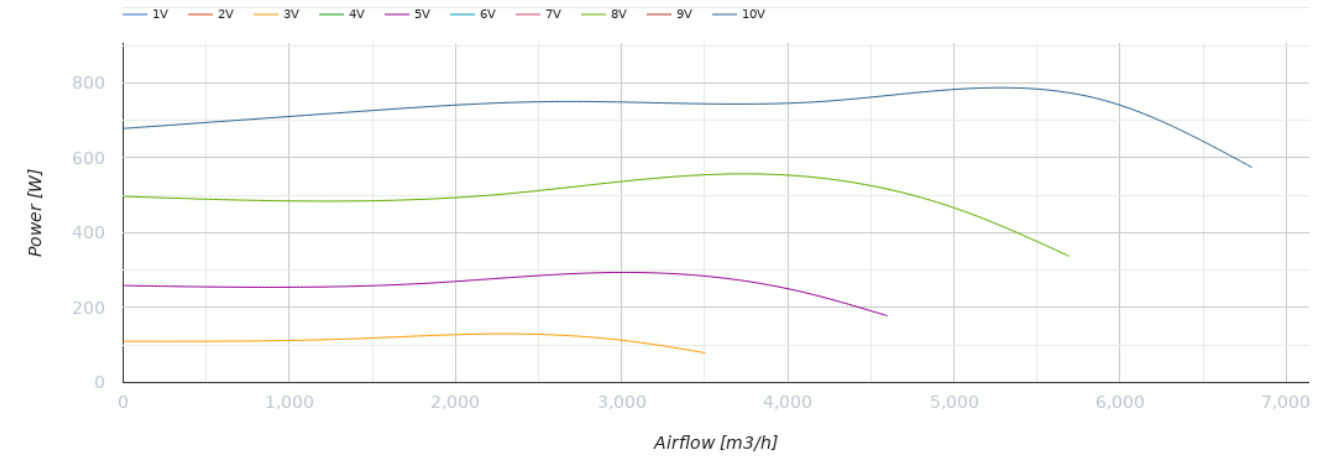

Dimensions

A
670

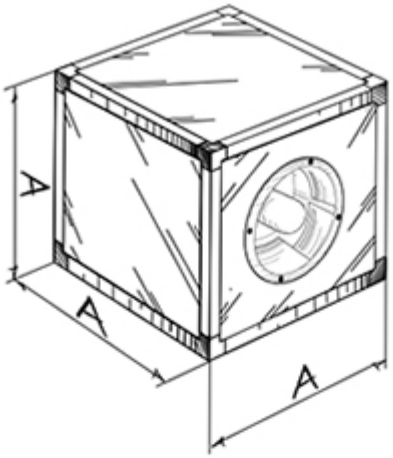

Iso-V EC

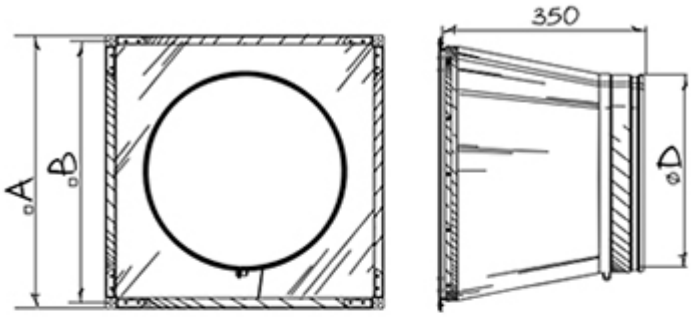

ARV

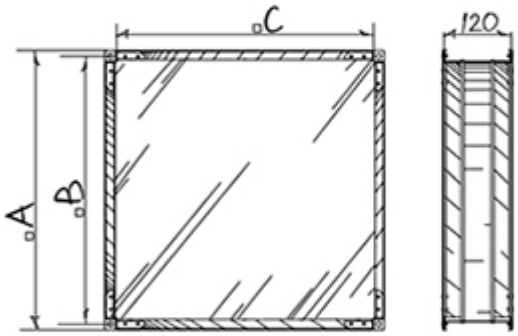

AKV

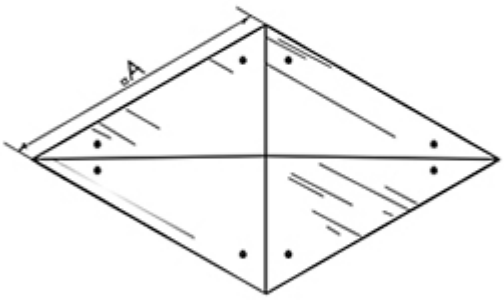

RSD-IV

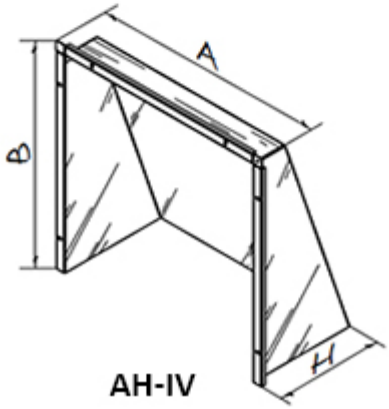

AH-IV

Ecodesign

Trademark	Blauberg
Model	Iso-V EC 450
Type of ventilation unit	Unidirectional
Type of drive installed	Integrated VSD
Type of heat recovery system	None
Nominal external pressure (Pa)	405
Maximum external leakage rates (%)	2.7
Static efficiency (%)	70.4
Declared typology	NRVU UVU
Effective electric power input (kW)	0.75
Sound power level (dB(A))	70