

Iso-V 400 4E

Centrifugal inline fans in sound-insulated casings

- Sound-insulated casing
- Impeller type: Centrifugal impeller with backward curved blades
- Casing material: Galvanized steel
- Installation in any position

	Unit of measurement	Iso-V 400 4E
Phases	-	1
Minimum supply voltage	V	230
Maximum supply voltage	V	230
Power supply frequency	Hz	50/60
Maximum airflow	m^3/h	3750
Weight	kg	39
Transported air temperature (max)	°C	80
Transported air temperature (min)	°C	-40
Ingress protection rating	-	IPX4
Impeller material	-	Aluminium

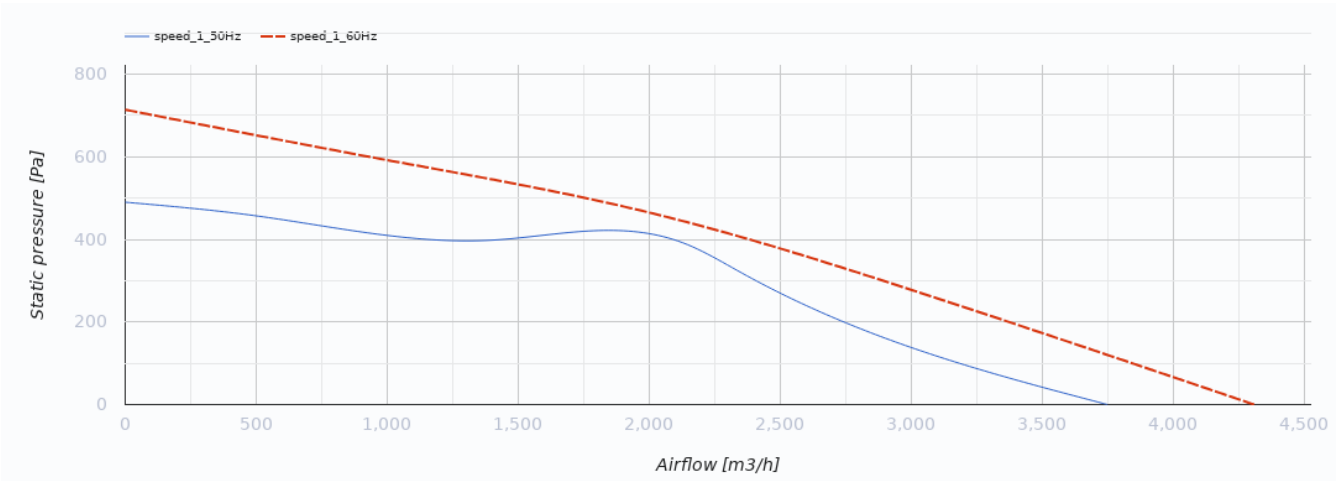

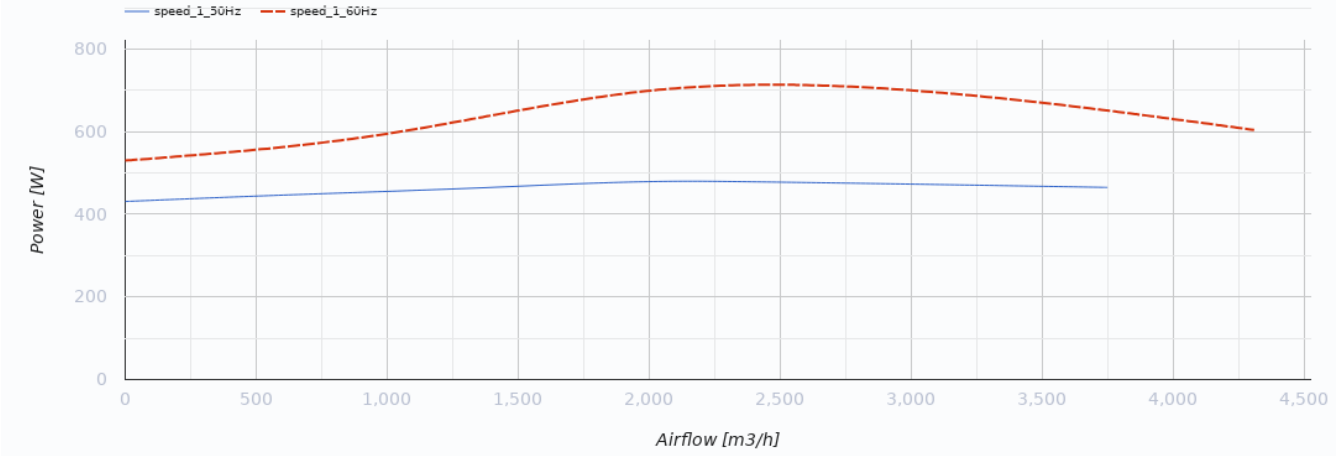

Dimensions

A
670

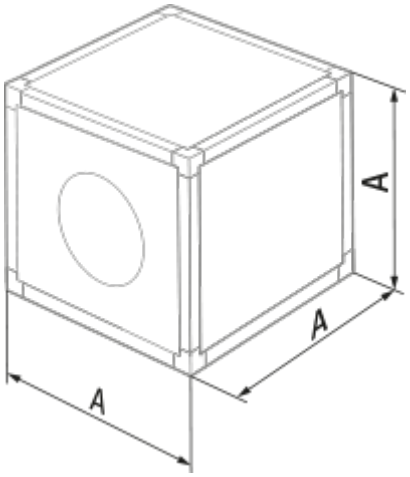

Ecodesign

Trademark	Blauberg
Model	Iso-V 400 4E
Type of ventilation unit	Unidirectional
Type of drive installed	External MSD or VSD
Type of heat recovery system	None
Nominal external pressure (Pa)	320
Maximum external leakage rates (%)	2.7
Static efficiency (%)	44.4
Declared typology	NRVU UVU
Effective electric power input (kW)	0.48
Sound power level (dB(A))	73