

Iso-B EC 250

Centrifugal inline fans with backward curved blades in sound-insulated casings with EC-motors

- Sound-insulated casing
- Impeller type: Centrifugal impeller with backward curved blades
- Casing material: Galvanized steel
- Installation in any position

	Unit of measurement	Iso-B EC 250
Phases	-	1
Minimum supply voltage	V	230
Maximum supply voltage	V	230
Power supply frequency	Hz	50/60
Maximum airflow	m³/h	1145
Transported air temperature (max)	°C	60
Transported air temperature (min)	°C	-25
Ingress protection rating	-	IPX4
Ingress protection rating of the drive	-	IP55
Impeller material	-	Plastic

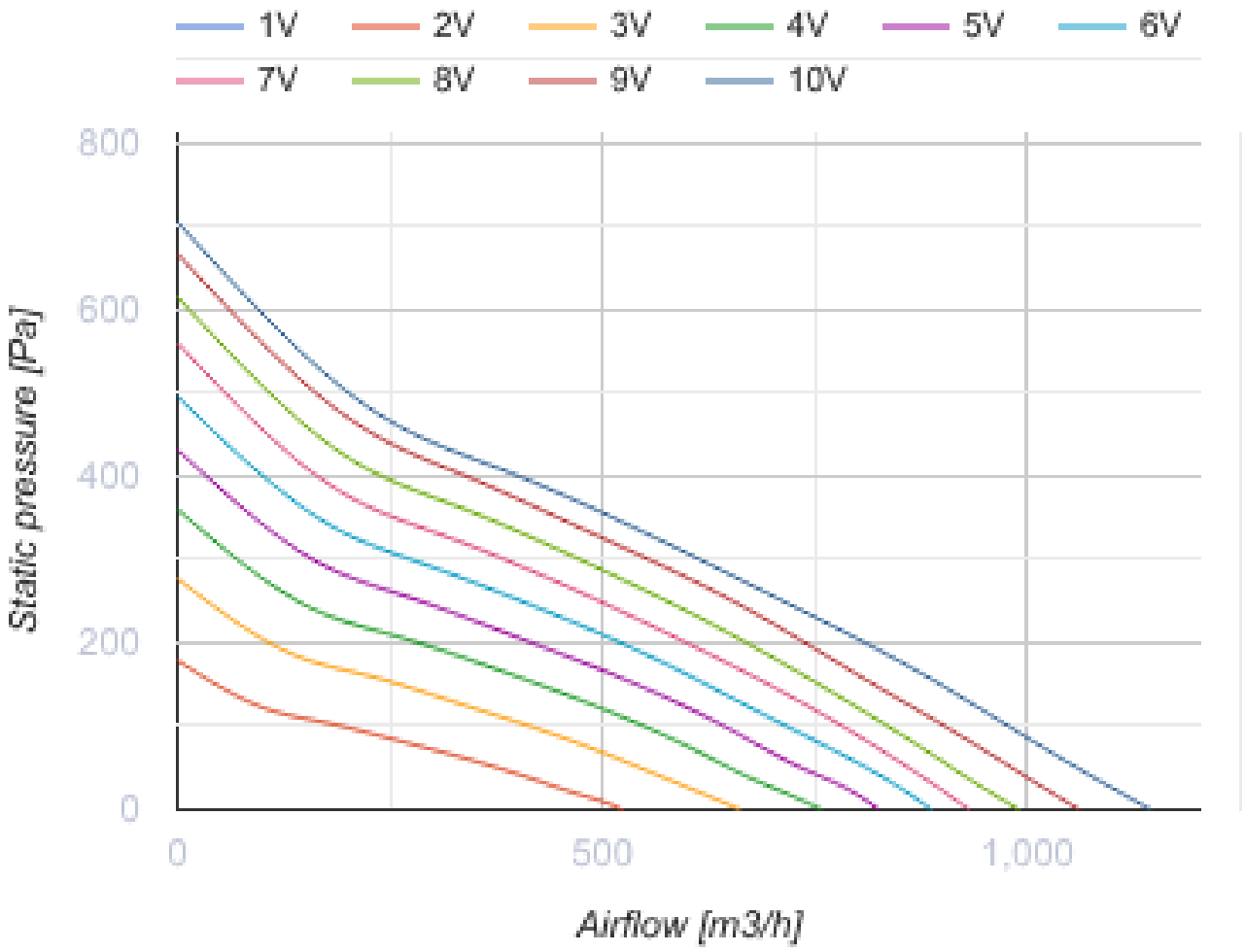
1V
2V
3V
4V
5V
6V
7V
8V
9V
10V
800
600
400
200
0
Static pressure [Pa]
0
500
1,000
Airflow [m3/h]

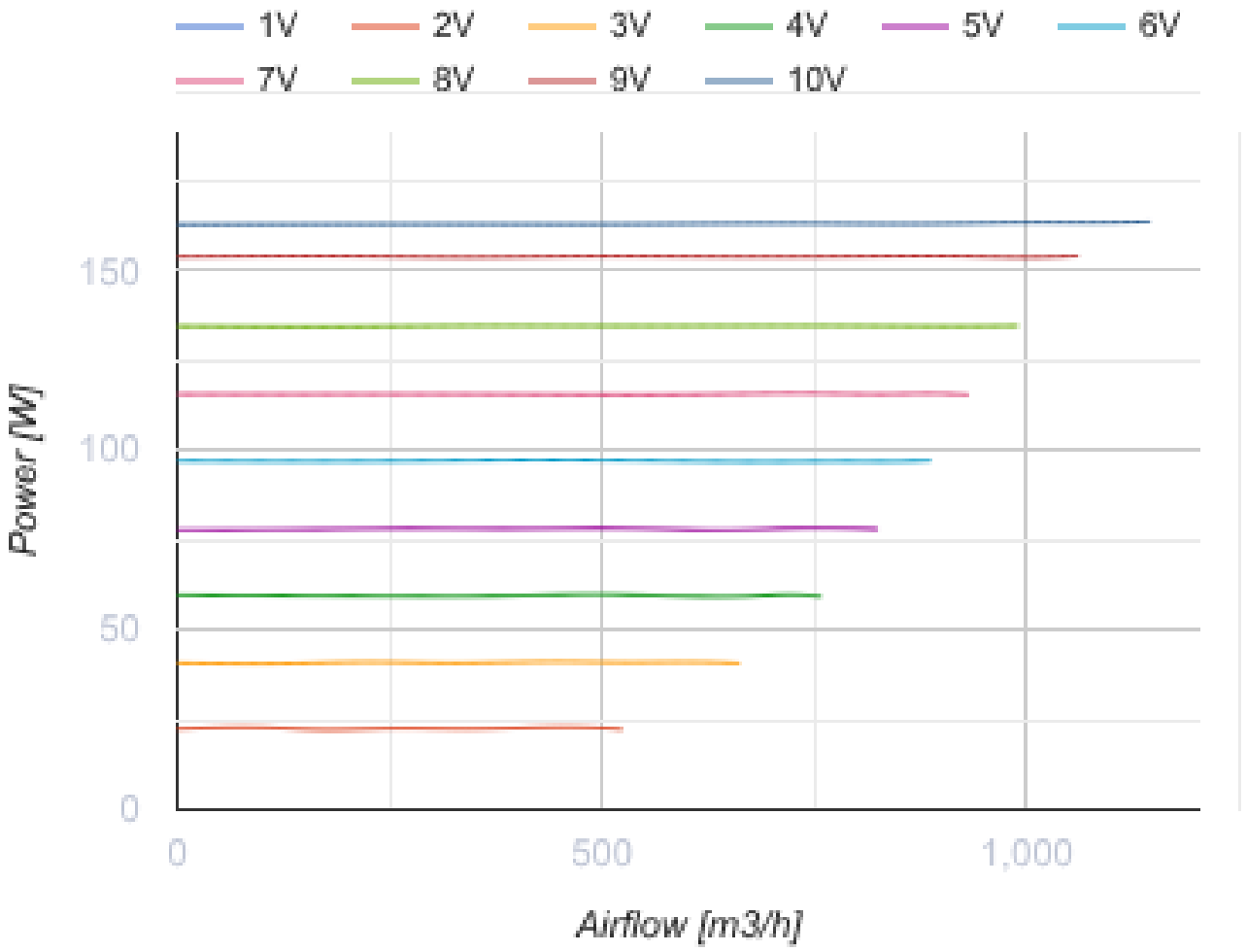

Dimensions

ØD	L	L1	B	B1	H
249	435	490	485	590	295

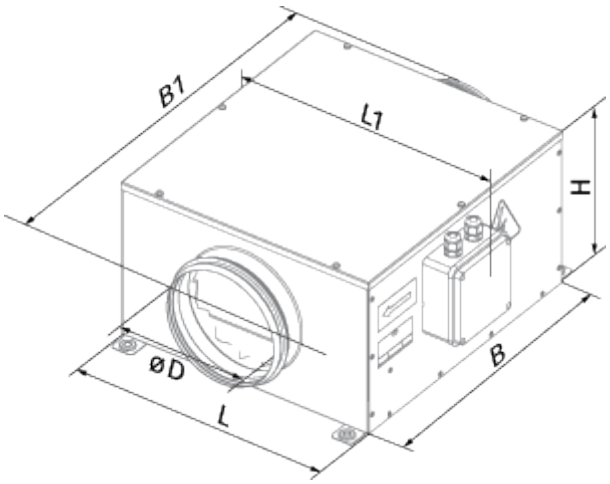

Ecodesign

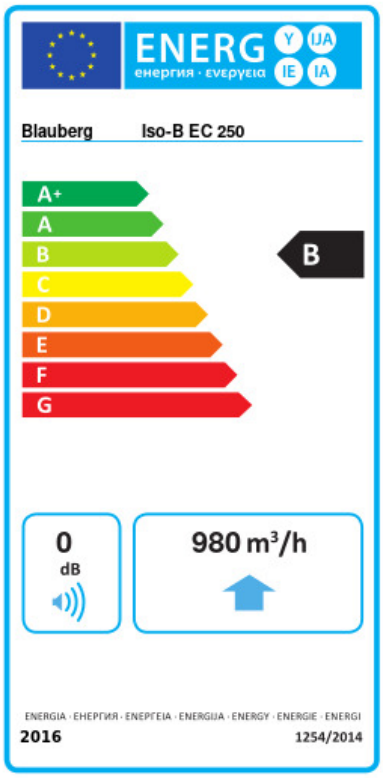

Trademark	Blauberg					
Model	Iso-B EC 250					
Specific energy consumption (SEC) (kWh/(m²/a))	Cold		Average		Warm	
	-53.9	A+	-26.8	B	-11.3	E
Type of ventilation unit	Unidirectional					
Type of drive installed	Variable speed					
Type of heat recovery system	None					
Maximum flow rate (m³/h)	980					
Electric power input (W)	163.5					
Reference flow rate (m³/s)	0.191					
Reference pressure difference (Pa)	50					
Specific power input (SPI) (W/(m³/h))	0.114					
Control typology	Local demand control					
Maximum external leakage rates (%)	2.7					
Declared typology	RVU UVU					
The annual electricity consumption (AEC) (kWh/a)	Cold		Average		Warm	
	60		60		60	
The annual heating saved (AHS) (kWh/a)	Cold		Average		Warm	
	5536		2830		1280	