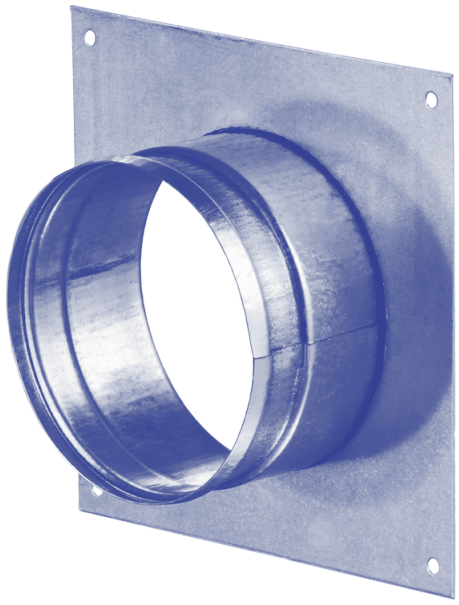

FQZ 80

Spigot with a plate for round ducts

- Casing material: Galvanized steel

	Unit of measurement	FQZ 80

Dimensions

Ø D	a	b	L
80	130 × 130	114 × 114	50

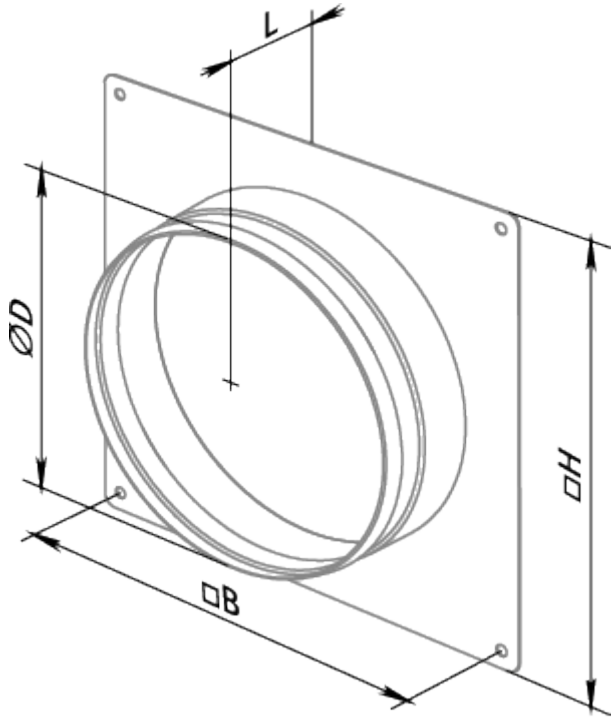
L
ØD
□H
□B