

FQM 150

Spigot with a plate for round ducts

- Casing material: Coated steel

	Unit of measurement	FQM 150

Dimensions

Ø D	a	b	L
150	204 × 204	188 × 188	50

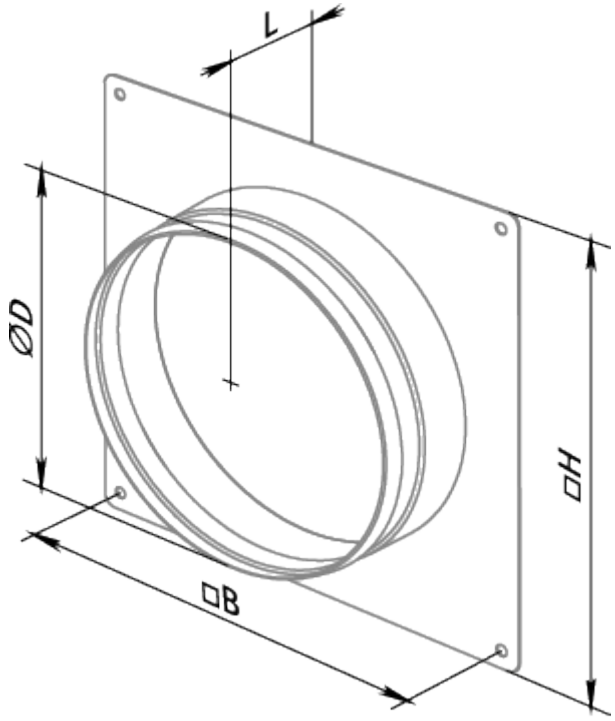
L
ØD
□H
□B