

DWP2 200

Swirl diffusers

- Casing material: Steel

	Unit of measurement	DWP2 200
Weight	kg	0.439

Dimensions

d	H
200	150

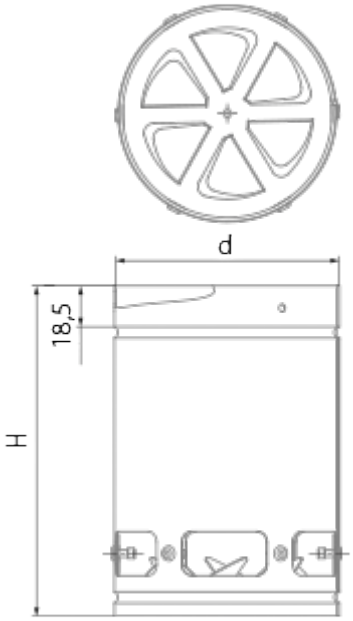
d
18,5
H