

DPK 125

The diffuser is compatible with all types of design decorative panels, including glass panels

• Casing material: Plastic

	Unit of measurement	DPK 125

Dimensions

D	W	L
124	165	88

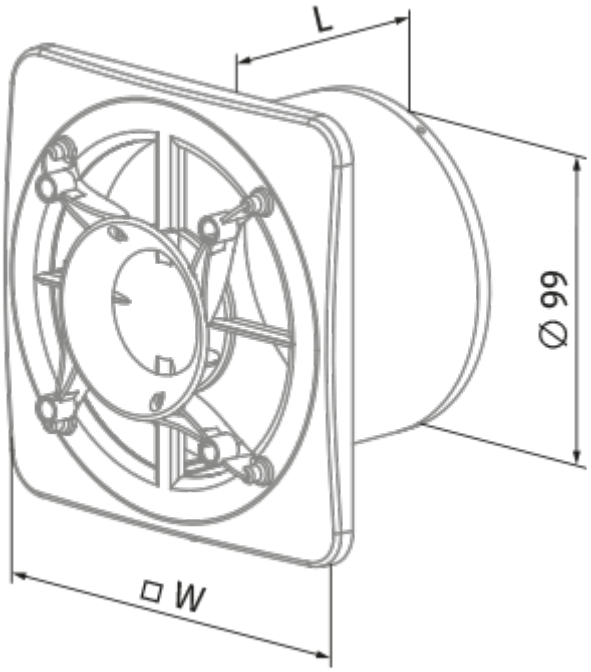
L
Ø 99
□ W