

# Centro-MZ EC 315

Inline centrifugal fans

• Impeller type: Centrifugal impeller with backward curved blades
• Casing material: Galvanized steel
• Installation in any position

| | Unit of measurement | Centro-MZ EC 315 |
|---|---|---|
| Phases | - | 1 |
| Maximum supply voltage | V | 230 |
| Minimum supply voltage | V | 230 |
| Power supply frequency | Hz | 50/60 |
| Maximum airflow | $m^3/h$ | 1370 |
| Weight | kg | 5.3 |
| Transported air temperature (max) | °C | 60 |
| Transported air temperature (min) | °C | -25 |
| Ingress protection rating | - | IPX4 |
| Impeller material | - | Plastic |

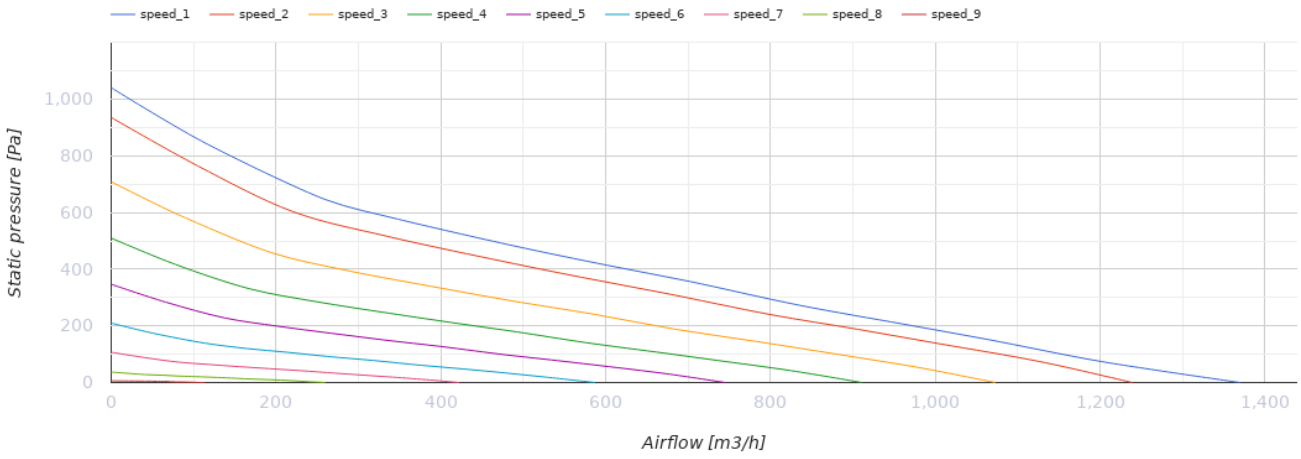


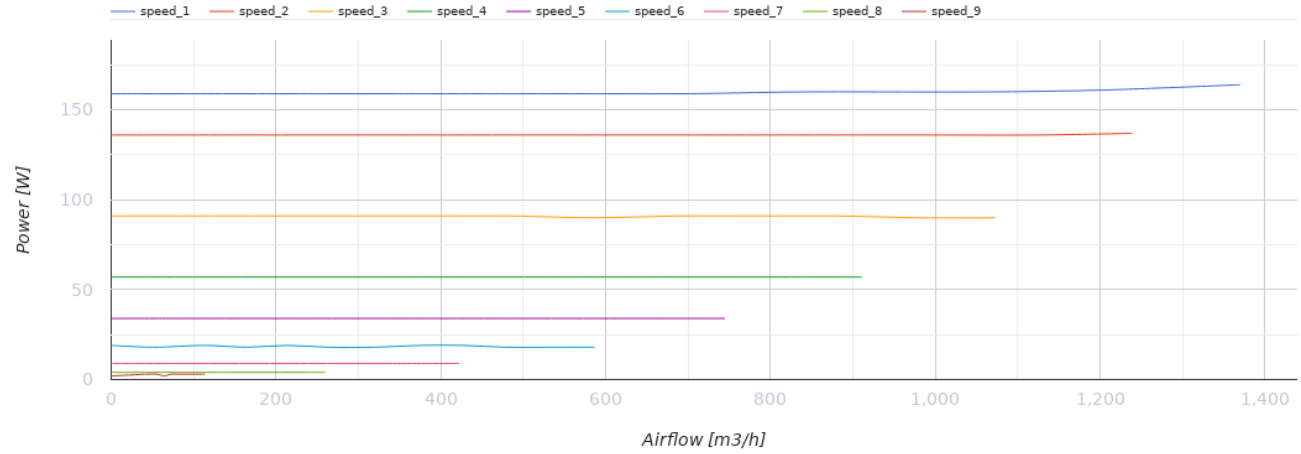


## Dimensions

| Ø D | Ø D1 | H | L | L1 | L2 |
|---|---|---|---|---|---|
| 313 | 405 | 460 | 245 | 25 | 30 |

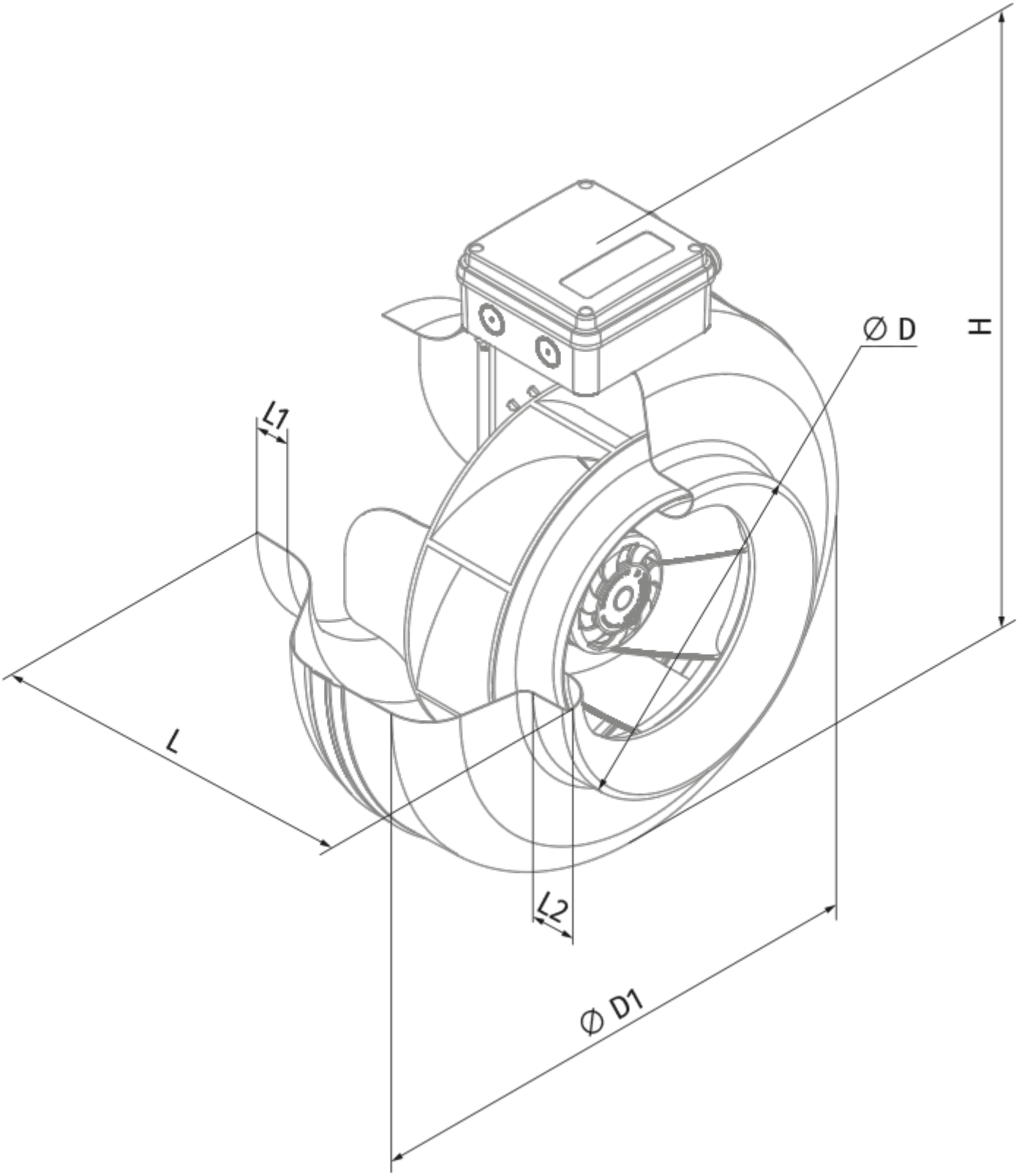
Ø D
H
L1
L
L2
Ø D1