

# Centro-MZ EC 160

Inline centrifugal fans

• Impeller type: Centrifugal impeller with backward curved blades
• Casing material: Galvanized steel
• Installation in any position

| | Unit of measurement | Centro-MZ EC 160 |
|---|---|---|
| Phases | - | 1 |
| Maximum supply voltage | V | 230 |
| Minimum supply voltage | V | 230 |
| Power supply frequency | Hz | 50/60 |
| Maximum airflow | $m^3/h$ | 735 |
| Weight | kg | 2.7 |
| Transported air temperature (max) | °C | 60 |
| Transported air temperature (min) | °C | -25 |
| Ingress protection rating | - | IPX4 |
| Impeller material | - | Plastic |

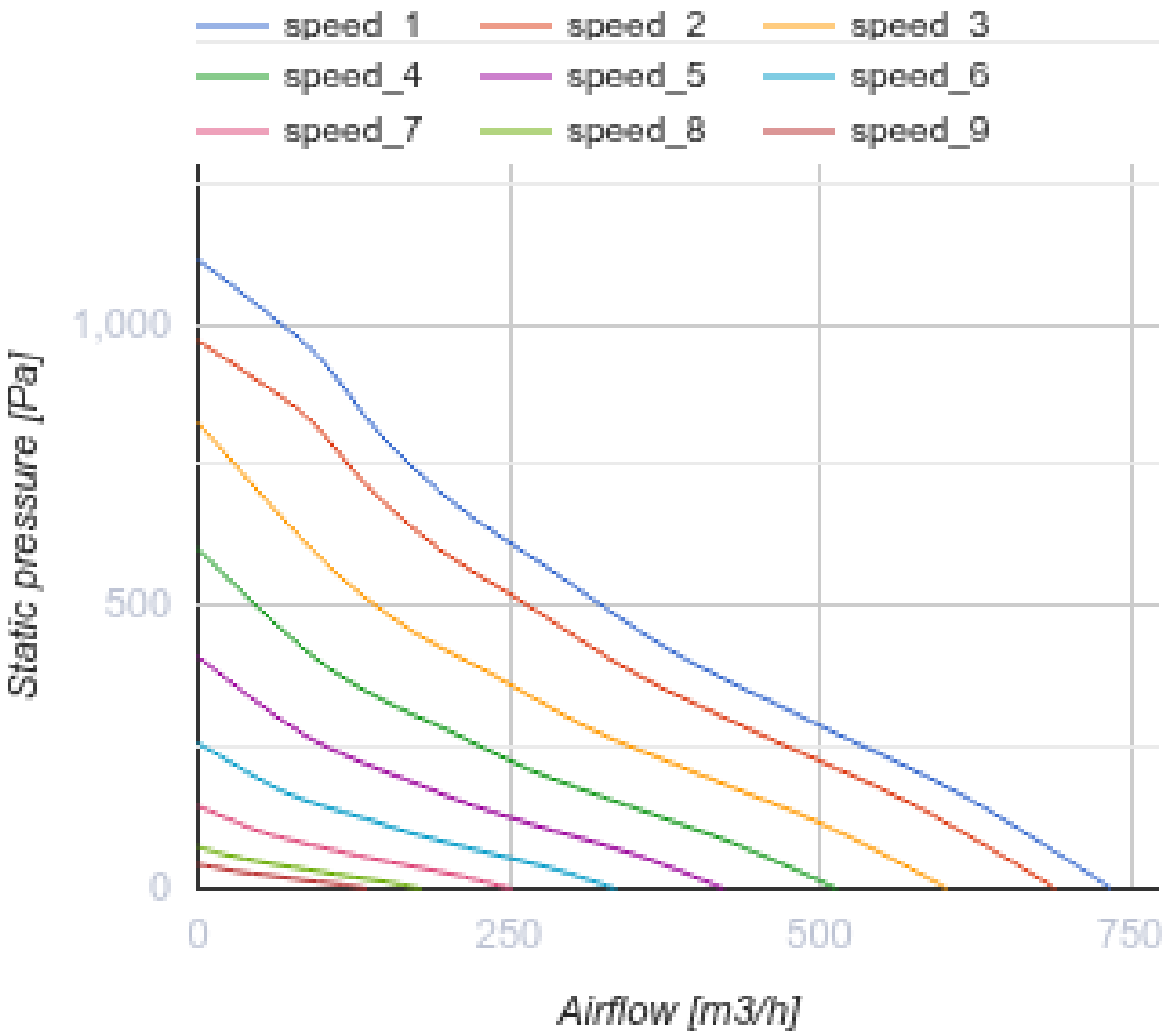
speed_1
speed_2
speed_3
speed_4
speed_5
speed_6
speed_7
speed_8
speed_9
1,000
500
0
Static pressure [Pa]
0
250
500
750
Airflow [m3/h]

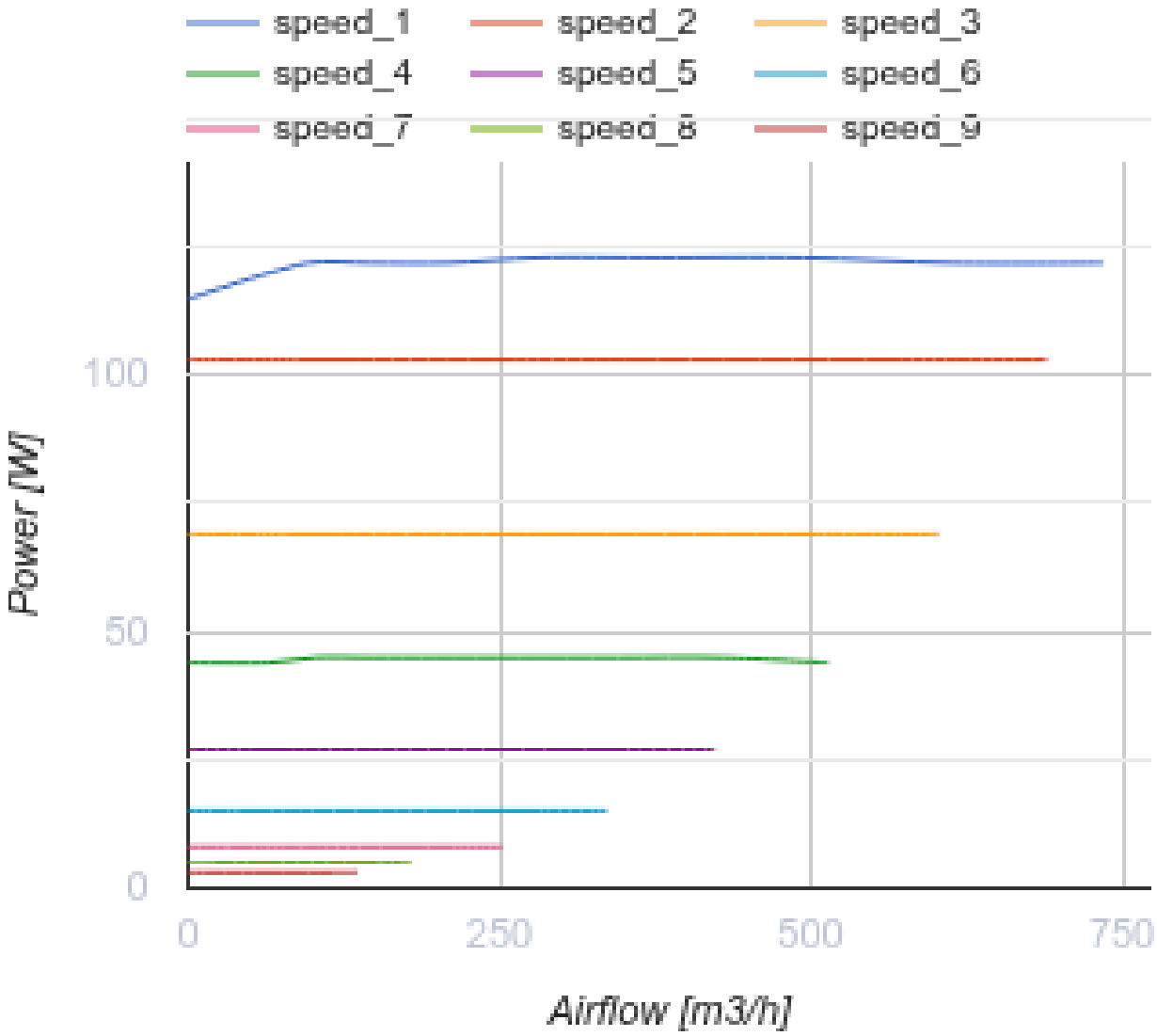


## Dimensions

| Ø D | Ø D1 | H | L | L1 | L2 |
|---|---|---|---|---|---|
| 159 | 275 | 330 | 170 | 20 | 20 |

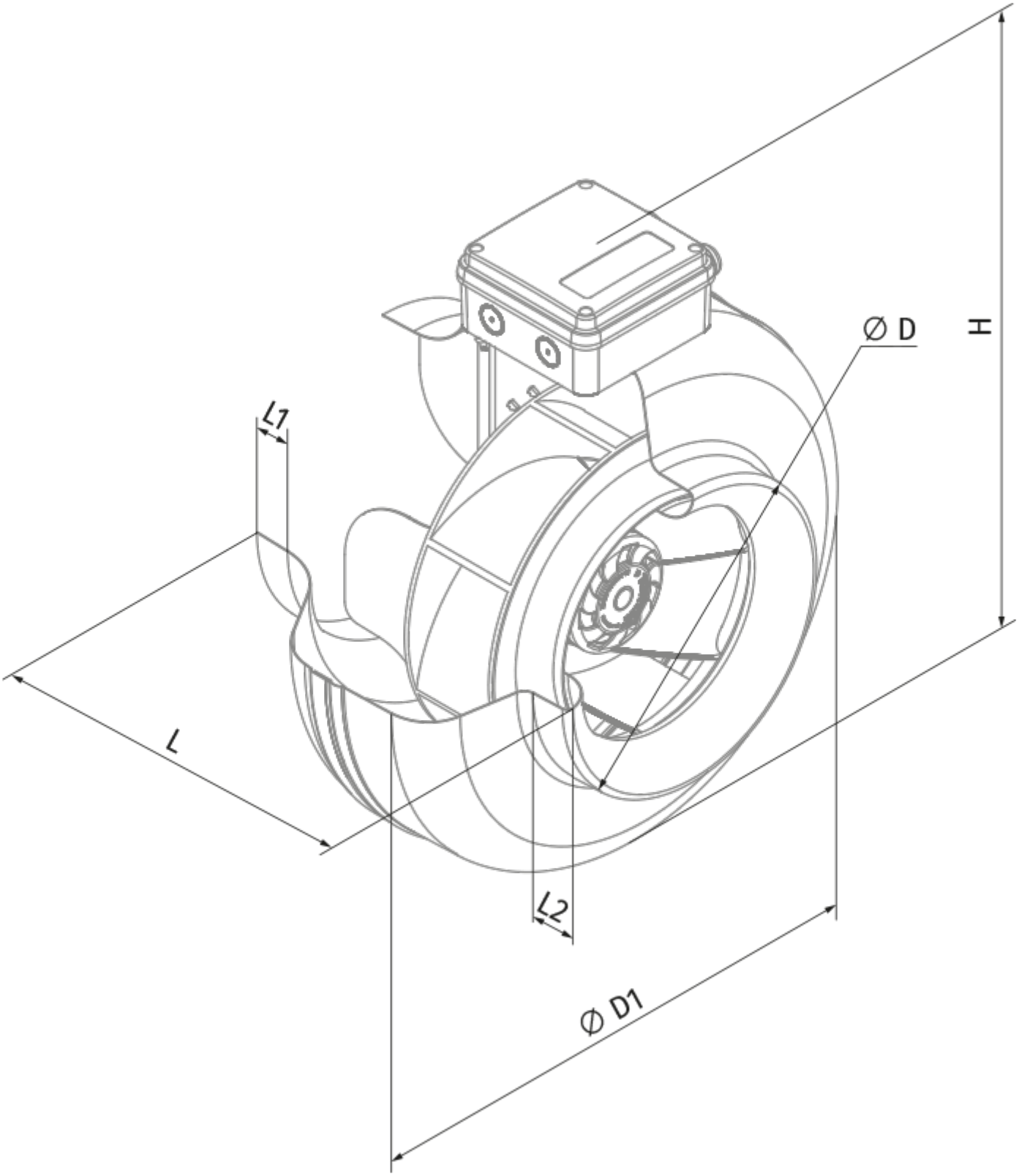
Ø D
H
L1
L
L2
Ø D1

## Ecodesign

| | |
|---|---|
| Trademark | Blauberg |
| Model | Centro-MZ EC 160 |
| Type of drive installed | External MSD or VSD |
| Type of heat recovery system | None |
| Nominal external pressure (Pa) | 423 |
| Maximum external leakage rates (%) | 2.7 |
| Static efficiency (%) | 36.6 |
| Effective electric power input (kW) | 0.124 |
| Sound power level (dB(A)) | 67 |
| Declared typology | NRVU UVU |

## Accessories

### Fittings

| Name | Photo | Description |
|---|---|---|
| K 160 |  | Clamp for round flexible ducts |