

Centro 315 max GI1

Centrifugal inline fans in plastic casings

• Control: Built-in speed controller
• Impeller type: Centrifugal impeller with backward curved blades
• Casing material: Polypropylene
• Installation in any position
• Cable with mains plug
• Temperature sensor: Built-in

	Unit of measurement	Centro 315 max GI1
Phases	-	1
Maximum supply voltage	V	230
Minimum supply voltage	V	230
Power supply frequency	Hz	50
Maximum airflow	m³/h	1700
Weight	kg	4.85
Transported air temperature (max)	°C	45
Transported air temperature (min)	°C	-25
Ingress protection rating	-	IPX4
Ingress protection rating of the drive	-	IP44
Impeller material	-	Plastic

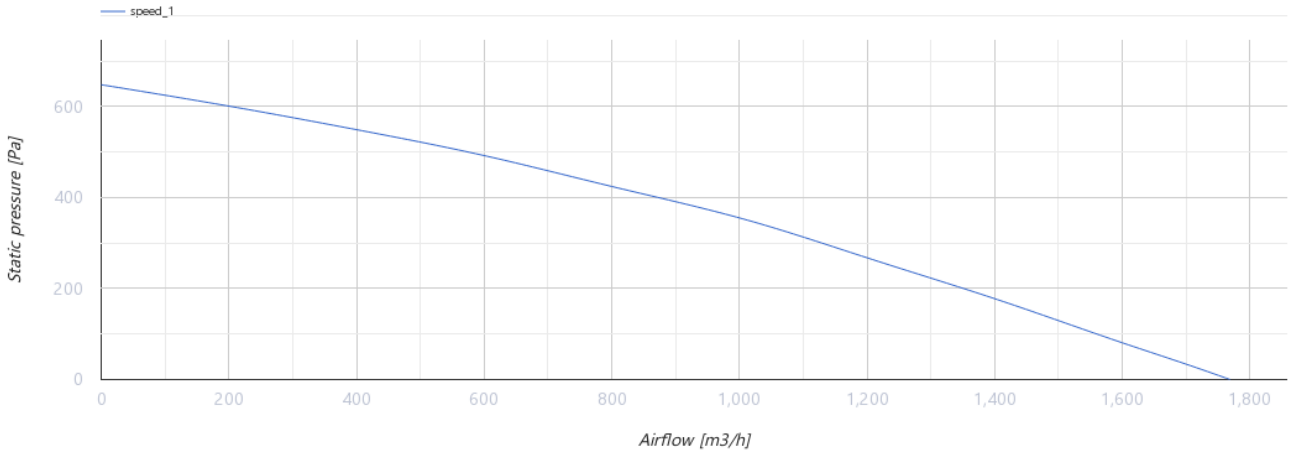

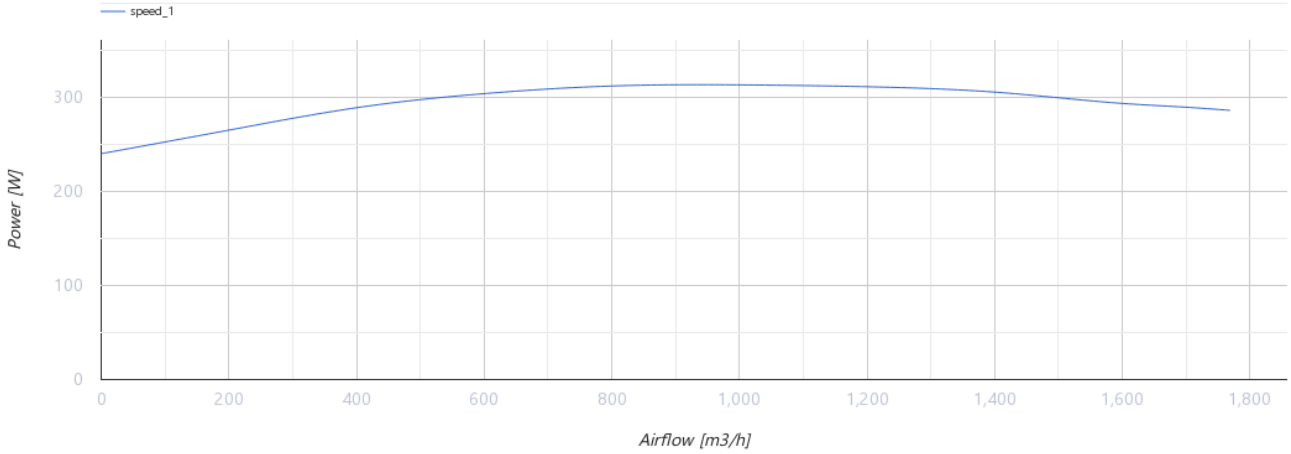

Dimensions

ØD	ØD1	B	L	L1	L2	L3
315	400	414	276	40	55	40

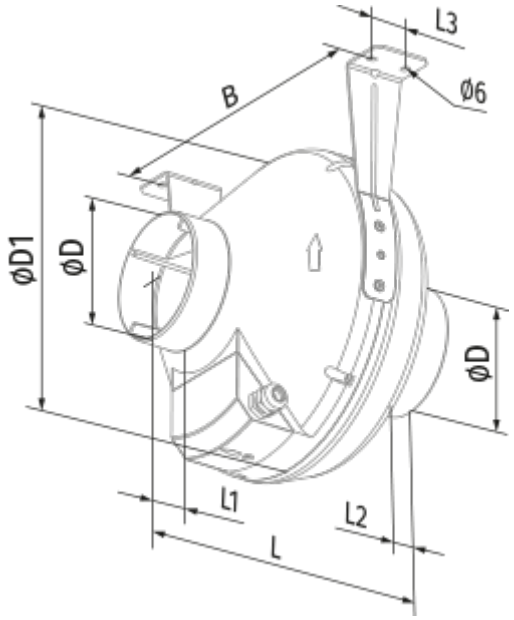
L3
B
Ø6
ØD1
ØD
ØD
L1
L2
L

Ecodesign

Trademark	Blauberg
Model	Centro 315 max GI1
Type of ventilation unit	Unidirectional
Type of drive installed	External MSD or VSD
Type of heat recovery system	None
Nominal external pressure (Pa)	283
Maximum external leakage rates (%)	2.7
Static efficiency (%)	30.3
Sound power level (dB(A))	73
Effective electric power input (kW)	0.307
Declared typology	NRVU UVU