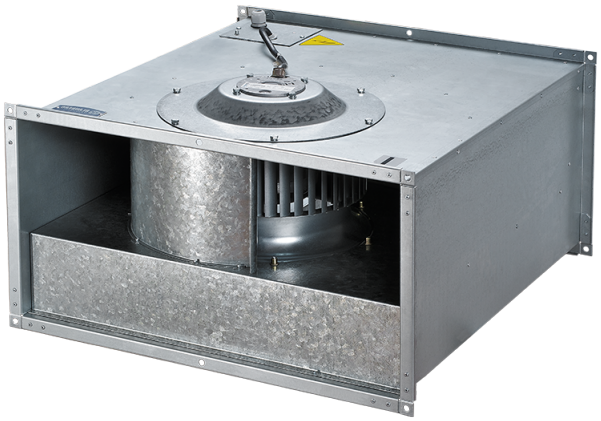

Box-F 700x400 4D

Centrifugal inline fans with forward curved blades

• Impeller type: Centrifugal impeller with forward curved blades
• Casing material: Galvanized steel
• Installation in any position

	Unit of measurement	Box-F 700x400 4D
Phases	-	3
Maximum supply voltage	V	400
Minimum supply voltage	V	400
Power supply frequency	Hz	50
Maximum airflow	m³/h	6450
Weight	kg	60
Transported air temperature (max)	°C	40
Transported air temperature (min)	°C	-25
Ingress protection rating	-	IPX4
Ingress protection rating of the drive	-	IP44
Impeller material	-	Galvanized steel

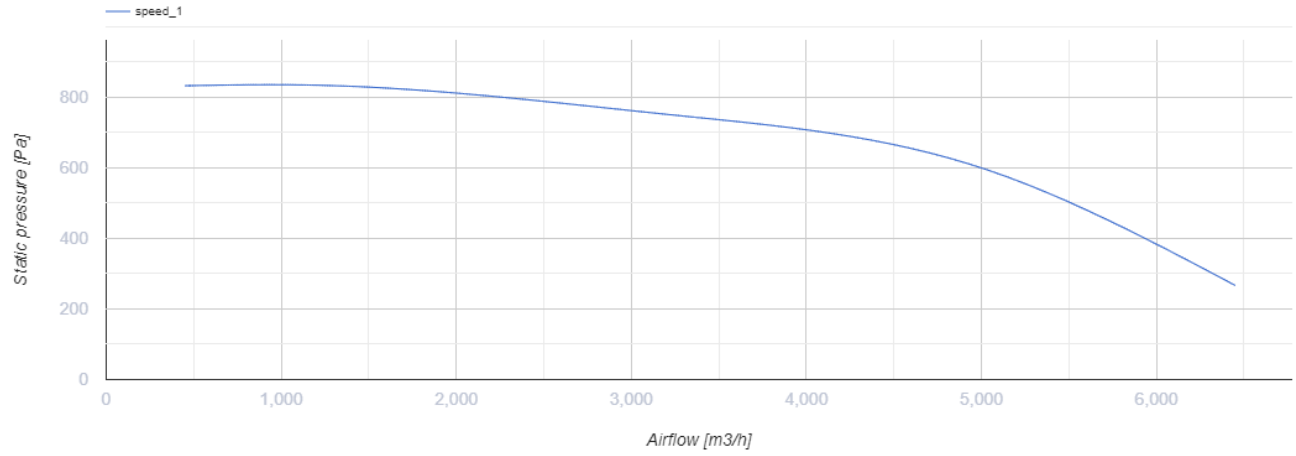

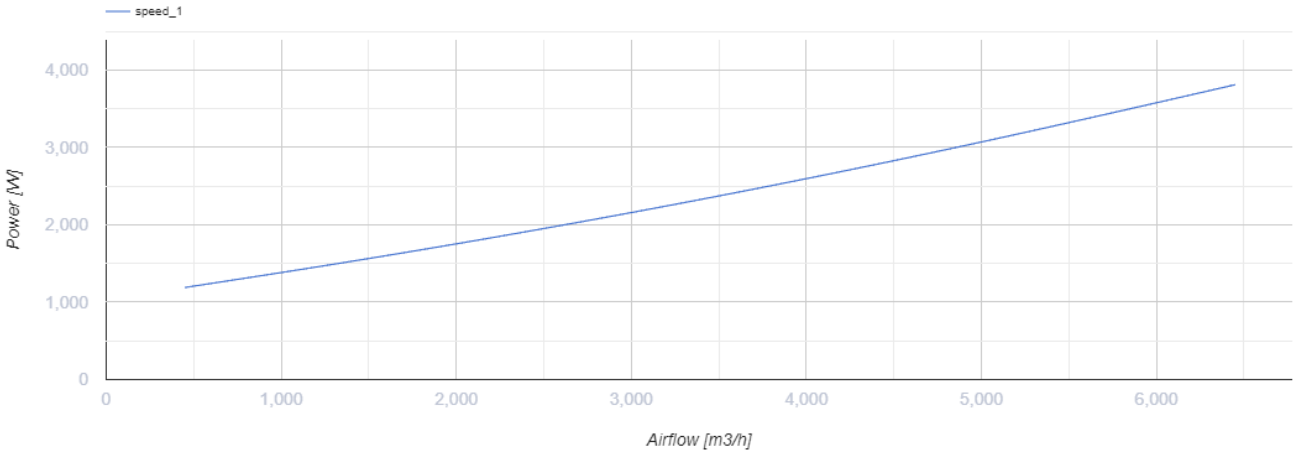

Dimensions

B	B1	B2	H	H1	H2	H3	L
700	720	740	400	420	440	480	780

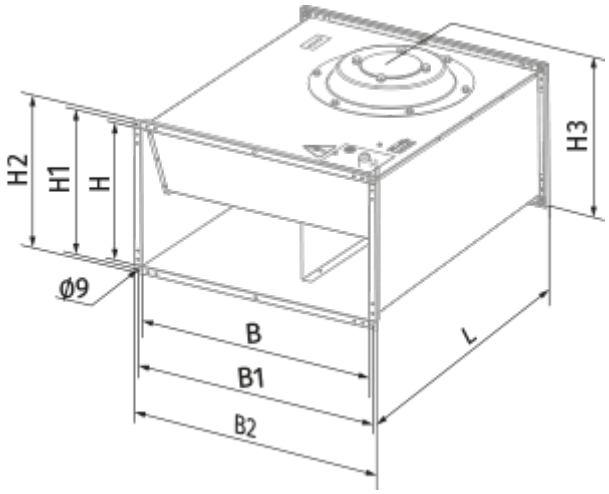

Ecodesign

Trademark	Blauberg
Model	Box-F 700x400 4D
Type of drive installed	External MSD or VSD
Type of heat recovery system	None
Nominal external pressure (Pa)	751
Maximum external leakage rates (%)	2.7
Static efficiency (%)	36.5
Sound power level (dB(A))	85
Effective electric power input (kW)	1.89
Declared typology	NRVU UVU