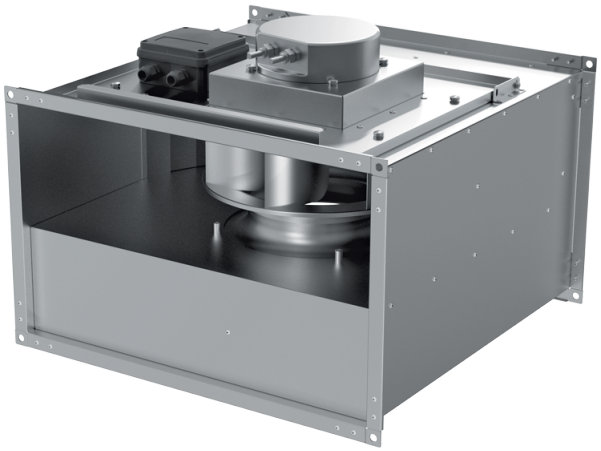

Box EC 60x30-1 max

Centrifugal inline fans with backward curved blades with EC-motors

- Impeller type: Centrifugal impeller with backward curved blades
- Casing material: Galvanized steel
- Installation in any position

	Unit of measurement	Box EC 60x30-1 max
Maximum supply voltage	V	230
Minimum supply voltage	V	230
Power supply frequency	Hz	50/60
Maximum airflow	m^3/h	3060
Weight	kg	26.5
Transported air temperature (max)	°C	50
Transported air temperature (min)	°C	-25
Ingress protection rating	-	IPX4
Ingress protection rating of the drive	-	IP54
Impeller material	-	Aluminium

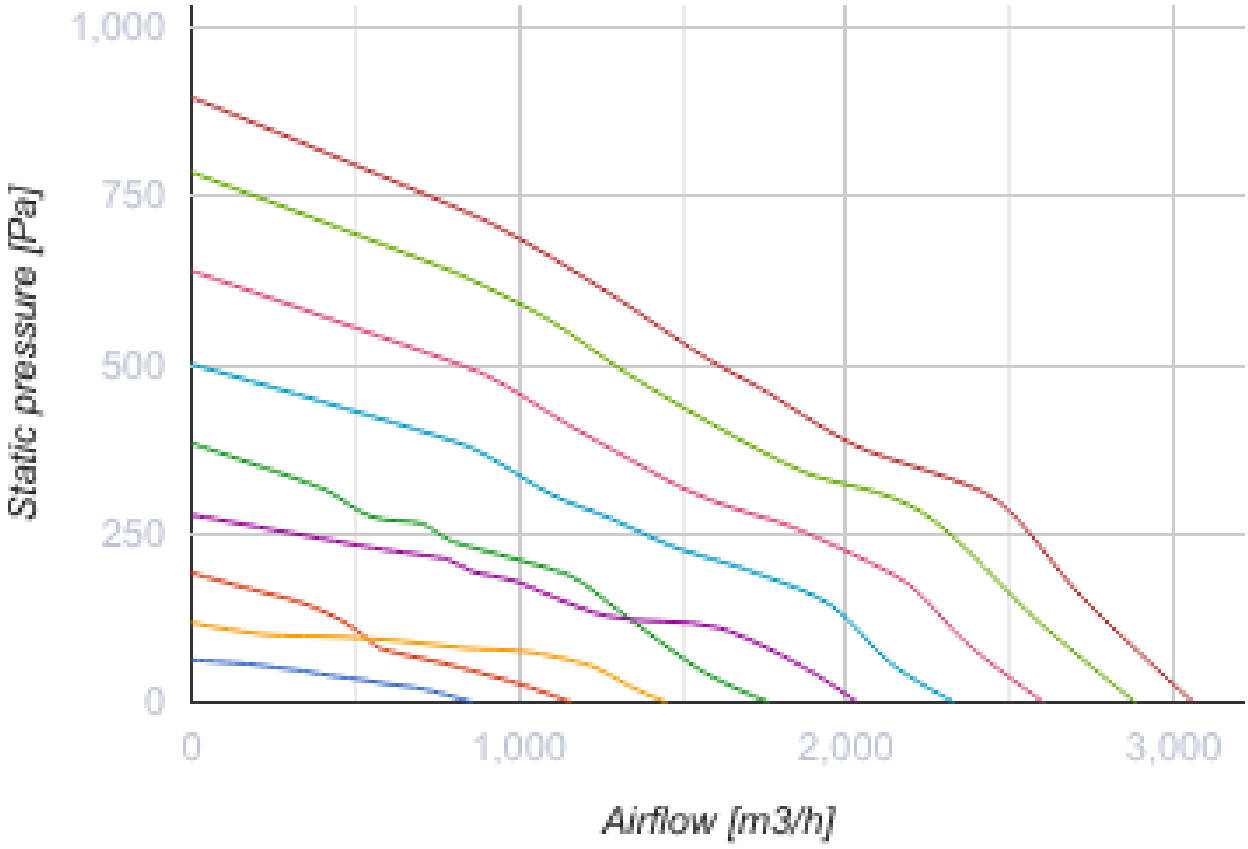
1,000
750
500
250
0
Static pressure [Pa]
0
1,000
2,000
3,000
Airflow [m3/h]

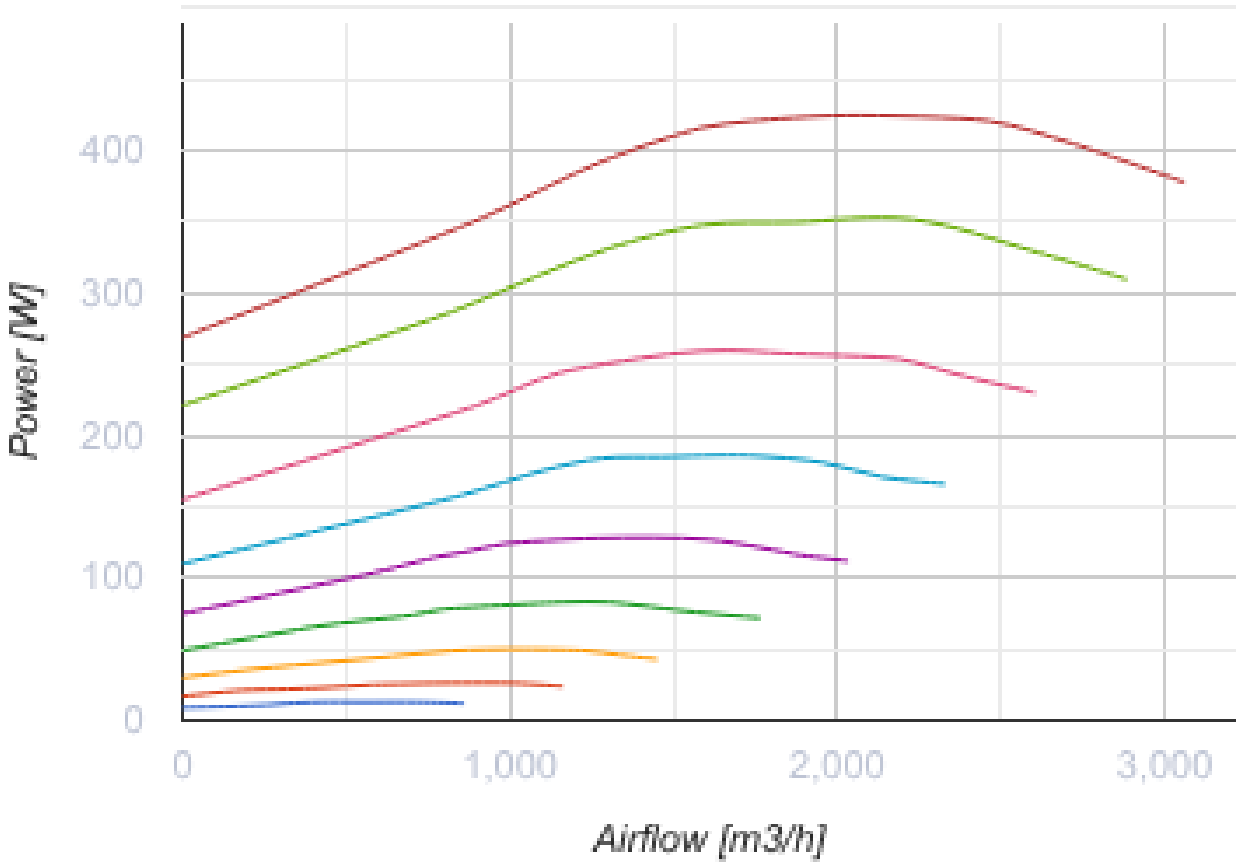

Dimensions

H	H1	H2	H3	L	W	W1	W2
300	320	340	370	680	600	620	640

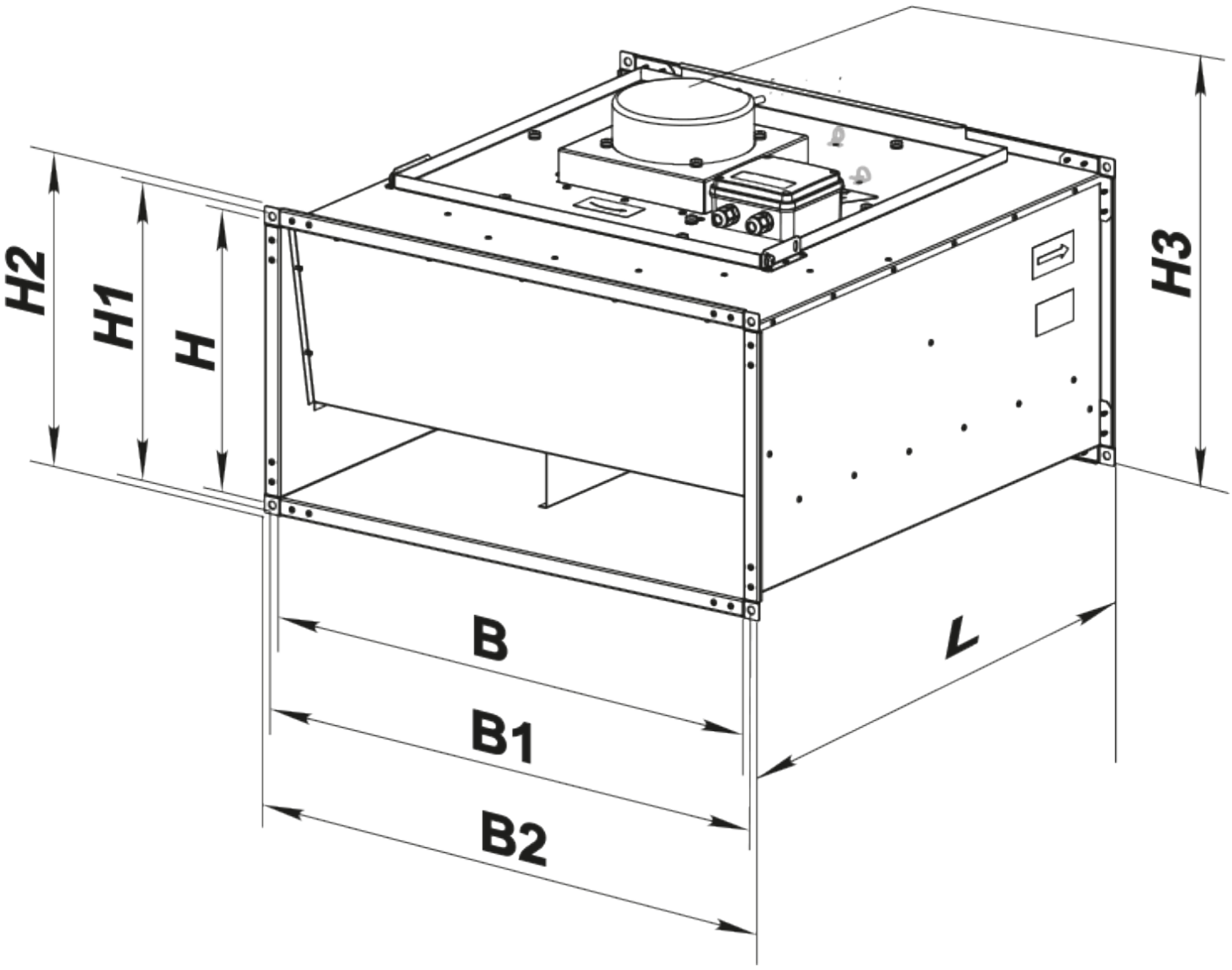
H2
H1
H
H3
B
B1
B2
L

Ecodesign

Trademark	Blauberg
Model	Box EC 60x30-1 max
Type of drive installed	Integrated VSD
Type of heat recovery system	None
Nominal external pressure (Pa)	429
Maximum external leakage rates (%)	2.7
Static efficiency (%)	42.3
Declared typology	NRVU UVU
Effective electric power input (kW)	0.462
Sound power level (dB(A))	72