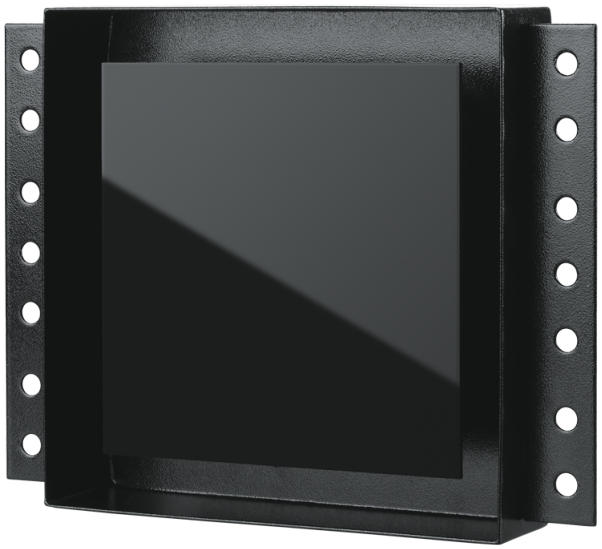

# Alphaceram Max 100

Flush-mounted axial fans for extract ventilation

- Impeller type: Axial
- Casing material: Metal

| | Unit of measurement | Alphaceram Max 100 |
|---|---|---|
| Maximum supply voltage | V | 240 |
| Minimum supply voltage | V | 220 |
| Power supply frequency | Hz | 50/60 |
| Maximum airflow | $m^3/h$ | 113 |
| Weight | kg | 1.28 |
| Ambient air temperature min | °C | 1 |
| Ambient air temperature max | °C | 40 |
| Ingress protection rating | - | IP24 |

## Dimensions

| ØD | H | W | L | L1 |
|---|---|---|---|---|
| 99 | 204 | 264 | 86 | 48 |

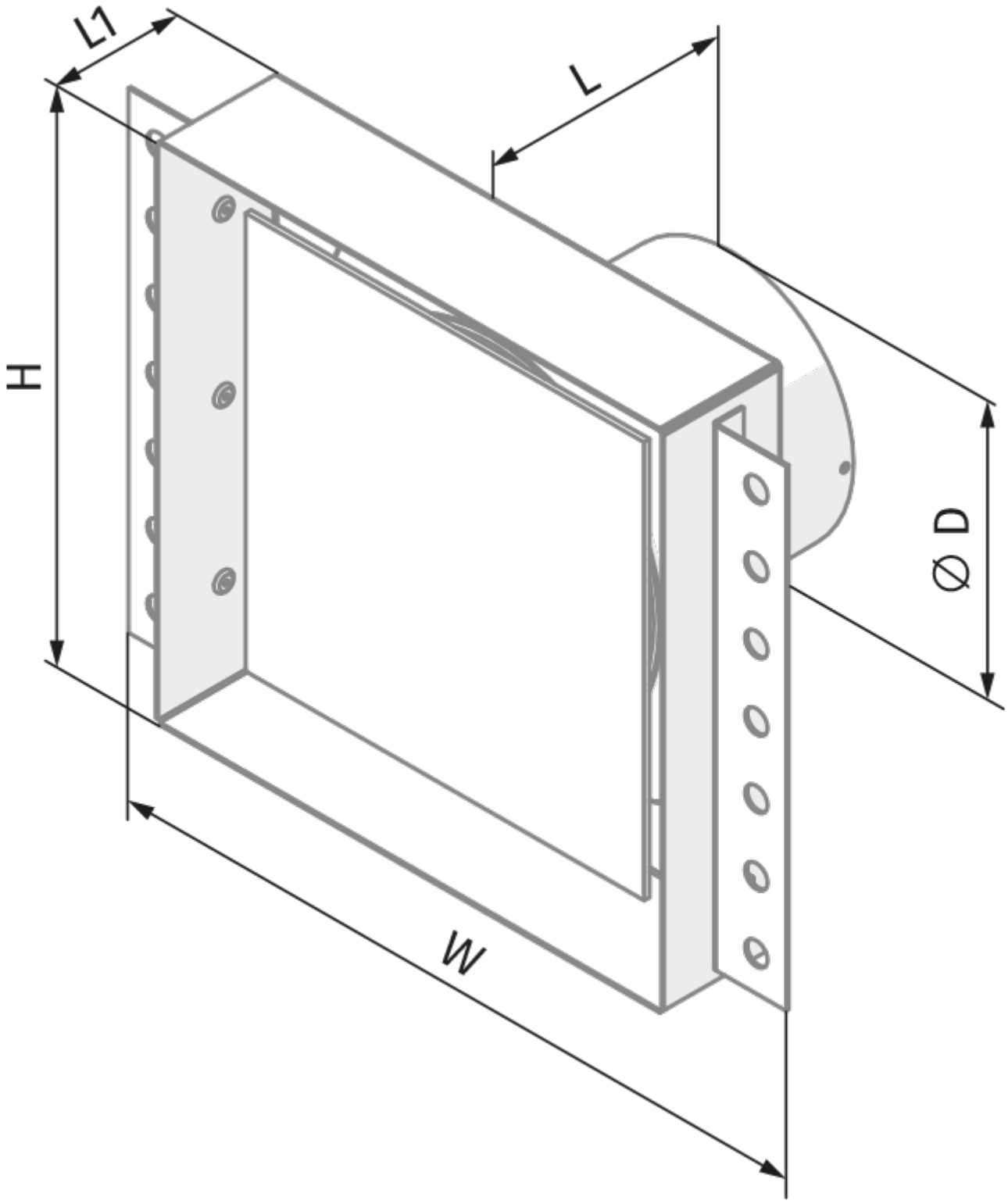
L1
L
H
Ø D
W