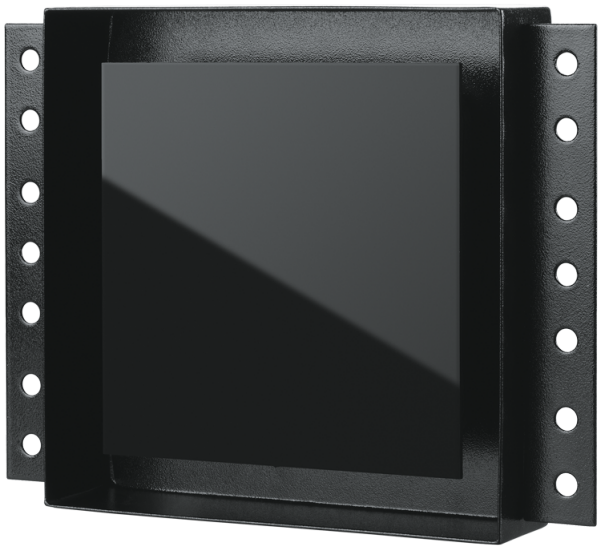

Alphaceram 125

Flush-mounted axial fans for extract ventilation

- Impeller type: Axial
- Casing material: Metal

	Unit of measurement	Alphaceram 125
Minimum supply voltage	V	220
Maximum supply voltage	V	240
Power supply frequency	Hz	50/60
Maximum airflow	m³/h	172
Weight	kg	1.4
Ambient air temperature min	°C	1
Ambient air temperature max	°C	40
Ingress protection rating	-	IP24

Dimensions

ØD	H	W	L	L1
125	229	289	87	49

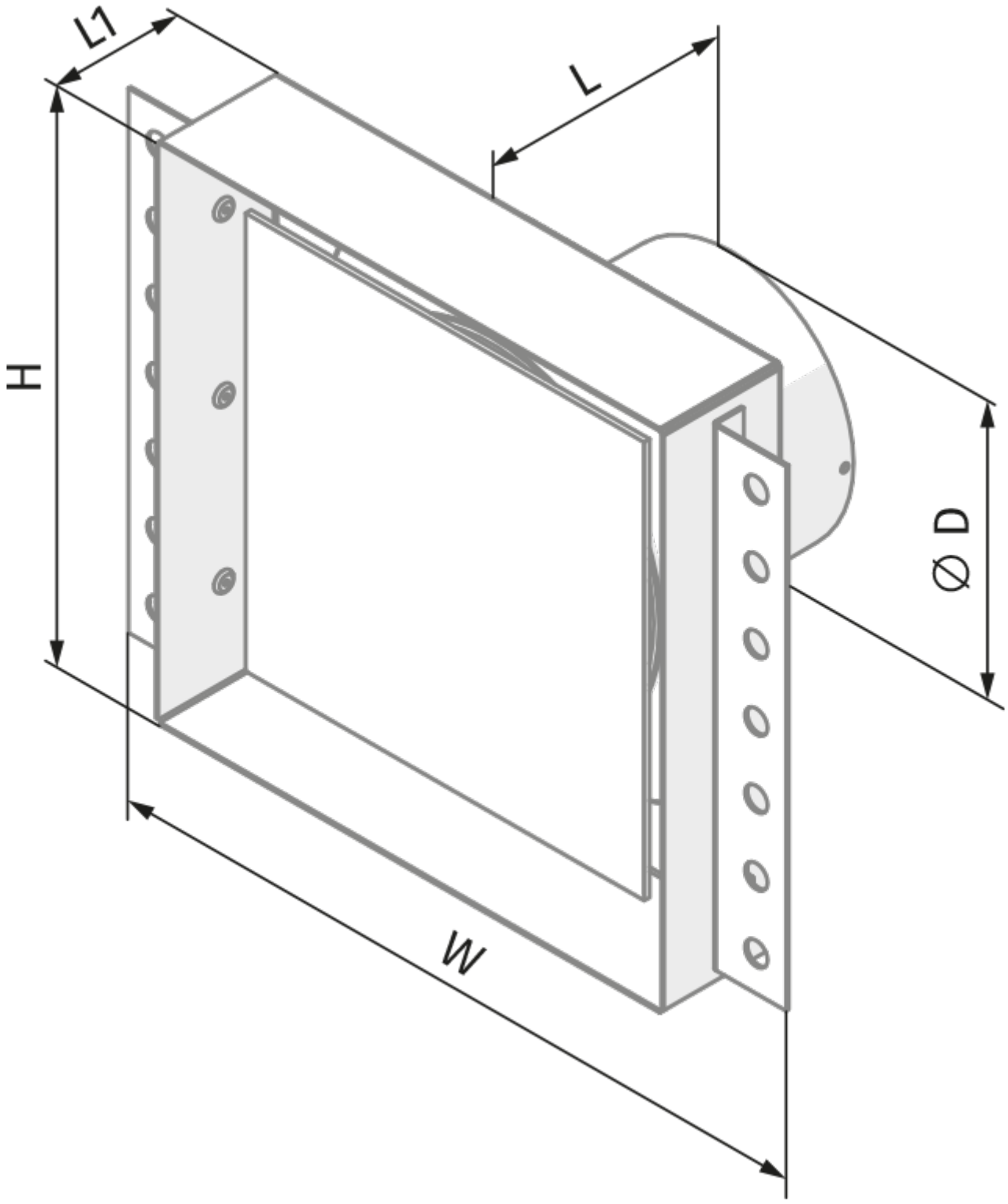
L1
L
H
Ø D
W

Ecodesign

Trademark	Blauberg					
Model	Alphaceram 125					
Specific energy consumption (SEC) (kWh/(m²/a))	Cold		Average		Warm	
	-28.7	B	-12.3	E	-2.9	F
Type of ventilation unit	Unidirectional					
Type of drive installed	Single speed					
Type of heat recovery system	None					
Maximum flow rate (m³/h)	90					
Electric power input (W)	14					
Reference flow rate (m³/s)	0.018					
Specific power input (SPI) (W/(m³/h))	0.156					
Control typology	Manual control					
Maximum external leakage rates (%)	2.7					
Sound power level (dB(A))	53					
The annual electricity consumption (AEC) (kWh/a)	Cold		Average		Warm	
	195		195		195	
The annual heating saved (AHS) (kWh/a)	Cold		Average		Warm	
	3355		1715		776	