


# Aero Still Chrome 150 SH

Extract fan for low-noise applications

- Casing material: Plastic
- Backdraft protection: Backdraft damper
- Pull cord
- Humidity sensor
- Timer: Turn off timer

| | Unit of measurement | Aero Still Chrome 150 SH |
|---|---|---|
| Minimum supply voltage | V | 220 |
| Maximum supply voltage | V | 240 |
| Power supply frequency | Hz | 50 |
| Maximum airflow | m³/h | 254 |
| Ambient air temperature min | °C | 1 |
| Ambient air temperature max | °C | 40 |
| Ingress protection rating | - | IP34 |
| Impeller material | - | Plastic |

## Dimensions

| a | b | c | Ø d | e |
|---|---|---|---|---|
| 198 | 170 | 119 | 150 | 30 |

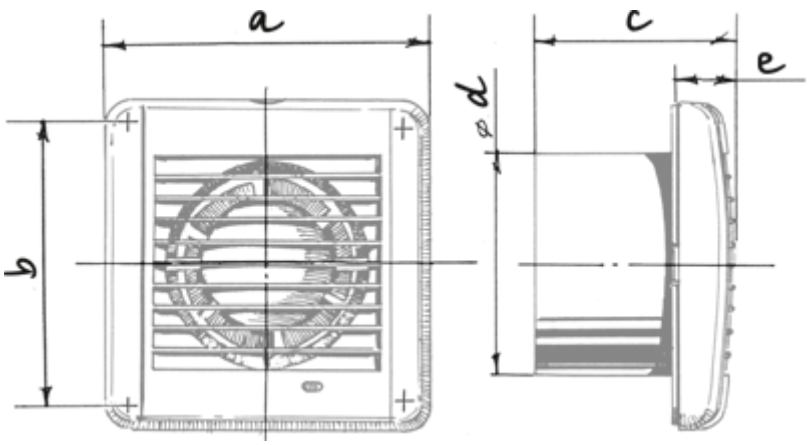
a
b
c
e
d
ø