

Aero 125 T

Low-noise axial fan for exhaust ventilation

- Casing material: Plastic
- Timer: Turn off timer

	Unit of measurement	Aero 125 T
Minimum supply voltage	V	220
Maximum supply voltage	V	240
Power supply frequency	Hz	50
Maximum airflow	m^3/h	193
Ingress protection rating	-	IP34
Impeller material	-	Plastic

Dimensions

a	b	c	Ø d	e
168	144	97	125	30

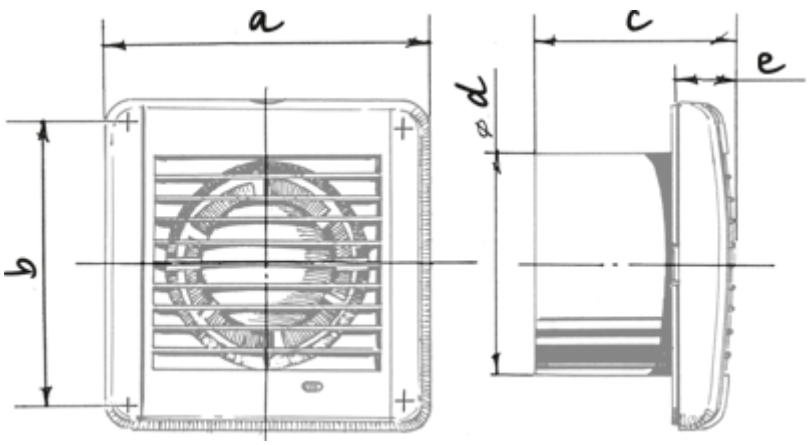
a
b
c
e
d
ø

Ecodesign

Trademark	Blauberg					
Model	Aero 125 T					
Specific energy consumption (SEC) (kWh/(m²/a))	Cold		Average		Warm	
	-32	B	-15	E	-6	F
Type of ventilation unit	Unidirectional					
Type of drive installed	Multi-speed					
Type of heat recovery system	None					
Maximum flow rate (m³/h)	193					
Electric power input (W)	16					
Reference flow rate (m³/s)	0.038					
Specific power input (SPI) (W/(m³/h))	0.053					
Control typology	Manual control					
Maximum external leakage rates (%)	2.7					
Declared typology	RVU UVU					
Sound power level (dB(A))	59					
The annual electricity consumption (AEC) (kWh/a)	Cold		Average		Warm	
	100		100		100	
The annual heating saved (AHS) (kWh/a)	Cold		Average		Warm	
	3400		1700		800	