

SINGLE-ROOM REVERSIBLE ENERGY RECOVERY VENTILATOR

Vento Expert A50-1 Pro
Vento Expert A50-1 Pro3
Vento Expert Duo A30-1 Pro

EN *USER'S MANUAL*

BLAUBERG

CONTENTS

Safety requirements ... 2
Purpose ... 4
Delivery set ... 4
Designation key ... 4
Technical data ... 5
Design and operating principle ... 6
Mounting and set-up ... 8
Connection to power mains ... 11
Technical maintenance ... 16
Troubleshooting ... 18
Storage and transportation regulations ... 18
Manufacturer's warranty ... 19
Certificate of acceptance ... 23
Seller information ... 23
Installation certificate ... 23
Warranty card ... 23

This user's manual is a main operating document intended for technical, maintenance, and operating staff.
The manual contains information about purpose, technical details, operating principle, design, and installation of the Vento Expert (Duo) A50(30)-1 Pro/Pro3 unit and all its modifications.
Technical and maintenance staff must have theoretical and practical training in the field of ventilation systems and should be able to work in accordance with workplace safety rules as well as construction norms and standards applicable in the territory of the country.

SAFETY REQUIREMENTS

This unit is not intended for use by persons (including children) with reduced physical, sensory or mental capabilities, or lack of experience and knowledge, unless they have been given supervision or instruction concerning use of the unit by a person responsible for their safety.
Children should be supervised to ensure that they do not play with the unit.
This appliance can be used by children aged from 8 years and above and persons with reduced physical, sensory or mental capabilities or lack of experience and knowledge if they have been given supervision or instruction concerning use of the appliance in a safe way and understand the hazards involved.
Cleaning and user maintenance shall not be done by children without supervision.
Children shall not play with the appliance.

If the supply cord is damaged, it must be replaced by the manufacturer, its service agent, or similarly qualified persons in order to avoid a safety hazard.

Connection to the mains must be made through a disconnecting device, which is integrated into the fixed wiring system in accordance with the wiring rules for design of electrical units, and has a contact separation in all poles that allows for full disconnection under overvoltage category III conditions.

Ensure that the unit is switched off from the supply mains before removing the guard.

Precautions must be taken to avoid the back-flow of gases into the room from the open flue of gas or other fuel-burning appliances.

The appliance may adversely affect the safe operation of appliances burning gas or other fuels (including those in other rooms) due to back flow of combustion gases. These gases can potentially result in carbon monoxide poisoning. After installation of the unit the operation of flued gas appliances should be tested by a competent person to ensure that back flow of combustion gases does not occur.

All operations described in this manual must be performed by qualified personnel only, properly trained and qualified to install, make electrical connections and maintain ventilation units.
Do not attempt to install the product, connect it to the mains, or perform maintenance yourself.
This is unsafe and impossible without special knowledge.
Disconnect the power supply prior to any operations with the unit.
All user's manual requirements as well as the provisions of all the applicable local and national construction, electrical, and technical norms and standards must be observed when installing and operating the unit.
Disconnect the unit from the power supply prior to any connection, servicing, maintenance, and repair operations.
Connection of the unit to power mains is allowed by a qualified electrician with a work permit for the electric units up to 1000 V after careful reading of the present user's manual.
Check the unit for any visible damage of the impeller, the casing, and the grille before starting installation. The casing internals must be free of any foreign objects that can damage the impeller blades.
While mounting the unit, avoid compression of the casing! Deformation of the casing may result in motor jam and excessive noise.
Misuse of the unit and any unauthorised modifications are not allowed.
Transported air must not contain any dust or other solid impurities, sticky substances, or fibrous materials.
Do not use the unit in a hazardous or explosive environment containing spirits, gasoline, insecticides, etc.
Do not close or block the intake or extract vents in order to ensure the efficient air flow.
Do not sit on the unit and do not put objects on it.
The information in this user's manual was correct at the time of the document's preparation.
The Company reserves the right to modify the technical characteristics, design, or configuration of its products at any time in order to incorporate the latest technological developments.
Never touch the unit with wet or damp hands.
Never touch the unit when barefoot.
Do not install or use the product until all construction and finishing work has been completed in the room where it is to be installed.
BEFORE INSTALLING ADDITIONAL EXTERNAL DEVICES, READ THE RELEVANT USER MANUALS.

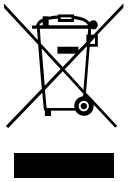

THE PRODUCT MUST BE DISPOSED SEPARATELY AT THE END OF ITS SERVICE LIFE.

DO NOT DISPOSE THE UNIT AS UNSORTED DOMESTIC WASTE.

PURPOSE

The ventilator is designed to ensure continuous mechanical air exchange in flats, cottages, hotels, cafés and other domestic and public premises. The ventilator is equipped with a regenerator that enables supply of fresh filtered air heated by means of extract air heat energy recovery.
The ventilator is designed for installation on external walls.
The ventilator is rated for continuous operation.

DELIVERY SET

Name	Vento Expert A50-1 Pro/Pro3	Vento Expert Duo A30-1 Pro
Indoor unit of the ventilator	1 pc.	1 pc.
Air duct	1 pc.	1 pc.
Air flow distributor	–	3-6 pcs.
Sound-absorbing material	1 pc.	–
Assembled cartridge	1 pc.	1 pc.
Outer ventilation hood	1 pc.	1 pc.
Remote control	1 pc.	1 pc.
Cardboard template	1 pc.	1 pc.
Fastening set	2 packs	2 packs
Foam wedges	1 set	1 set
User's manual	1 pc.	1 pc.
Mounting hood installation instruction	1 pc.	1 pc.
Packing box	1 pc.	1 pc.

DESIGNATION KEY

Vento Expert A 50 C1 -1 L S10 Pro

Automation availability
Pro – controls and control unit are included in the delivery set
Pro3 – model without automatic shutters, with manual airflow blocking

Ventilation hood model

Air duct length
_ – 500 mm
L – 700 mm
L035 – 350 mm
L10 – 1000 mm

Front panel modification
1 – flat front panel

Cartridge modification
_ – cartridge with a ceramic regenerator
C1 – cartridge with a shortened regenerator

Rated air flow [m³/h]

Air duct cross section
A – round

Ventilator series
Expert is a series of reversible ventilators with a unidirectional air flow.
Expert Duo is a series of reversible ventilators with a countercurrent air flow.

TECHNICAL DATA

The temperature in the room where the indoor unit of the ventilator is installed must be in the range from +1 ˚C to +40 ˚C and relative humidity up to 80% (without humidity condensation).
If the conditions for using the ventilator exceed the specified limits, switch off the ventilator.
Provide fresh air through the windows.
The temperature of the transported air should be in the range from -15 ˚C to +40 ˚C.
The unit is rated as a class II electric appliance.
Ingress protection rating against access to hazardous parts and water ingress is IP24.
The unit design is constantly being improved, thus some models may be slightly different from those described in this manual.

Technical specifications of the particular model are indicated on the unit casing.

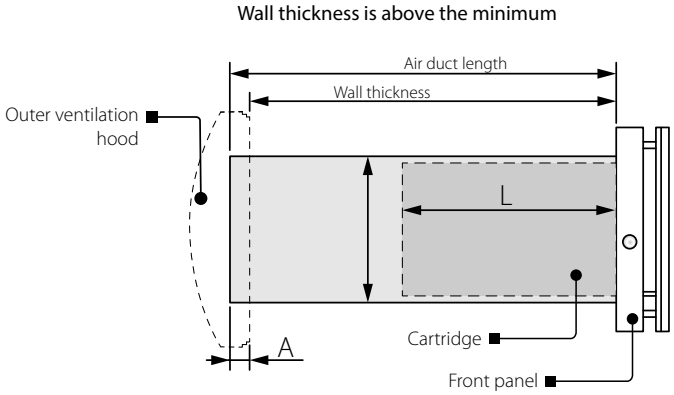

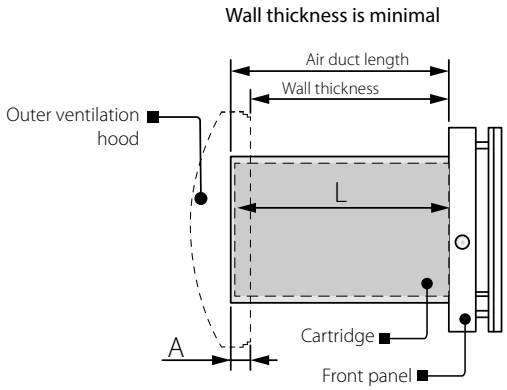

The air duct length depends on the unit model, refer to the Designation Key section.
L: cartridge length. Depends on the ventilator model.
The supplied ventilation hood model depends on the ventilator model.
The overall dimensions of the outer ventilation hood, the required outside protrusion length of the air duct **A** and the mounting sequence of the hood are stated in its mounting instruction.

Ventilator model	L, мм
Vento Expert RA/M1-50	250
Vento Expert RA/M1-50C1	220
Vento Expert Duo RA1-30	280

The overall dimensions of the front panel are stated below.

OVERALL DIMENSIONS OF THE INDOOR UNIT [mm]

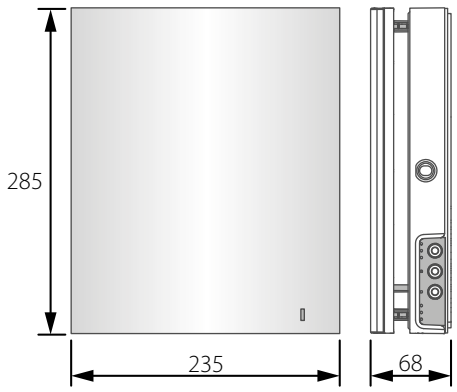

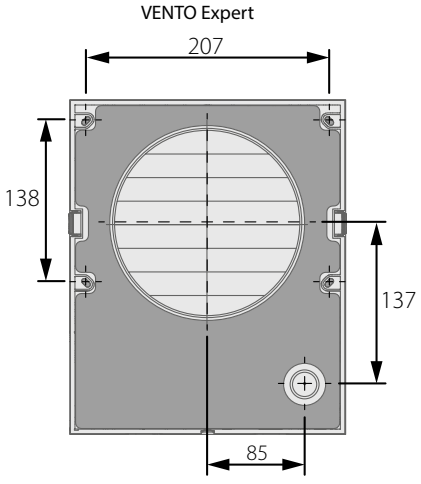

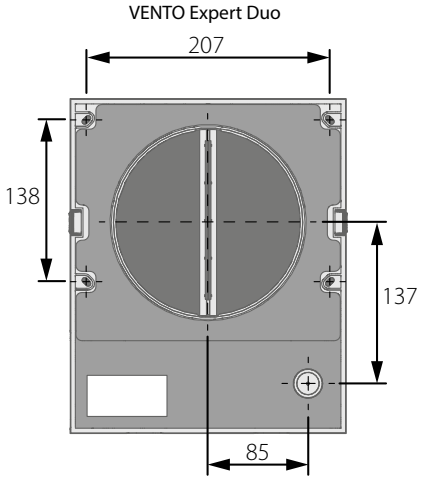

DESIGN AND OPERATING PRINCIPLE

The ventilator consists of an indoor unit with a decorative front panel, a cartridge, an air duct and an outer ventilation hood.
The cartridge is a basic functioning part of the ventilator. The cartridge consists of the fan, the regenerator and two filters that ensure rough air filtration and prevent ingress of dust and foreign objects into the regenerator and the fan.
The indoor assembly unit is equipped with automatic shutters that close during the ventilator standstill and prevent air backdraft.
The Vento Expert Duo A30-1 Pro units are equipped with a set of air flow separators. The design of the supplied ventilation hood ensures opposite direction of extract and supply air flows.
The outer ventilation hood is used to prevent direct ingress of water and other objects to the ventilator.

VENTILATOR DESIGN

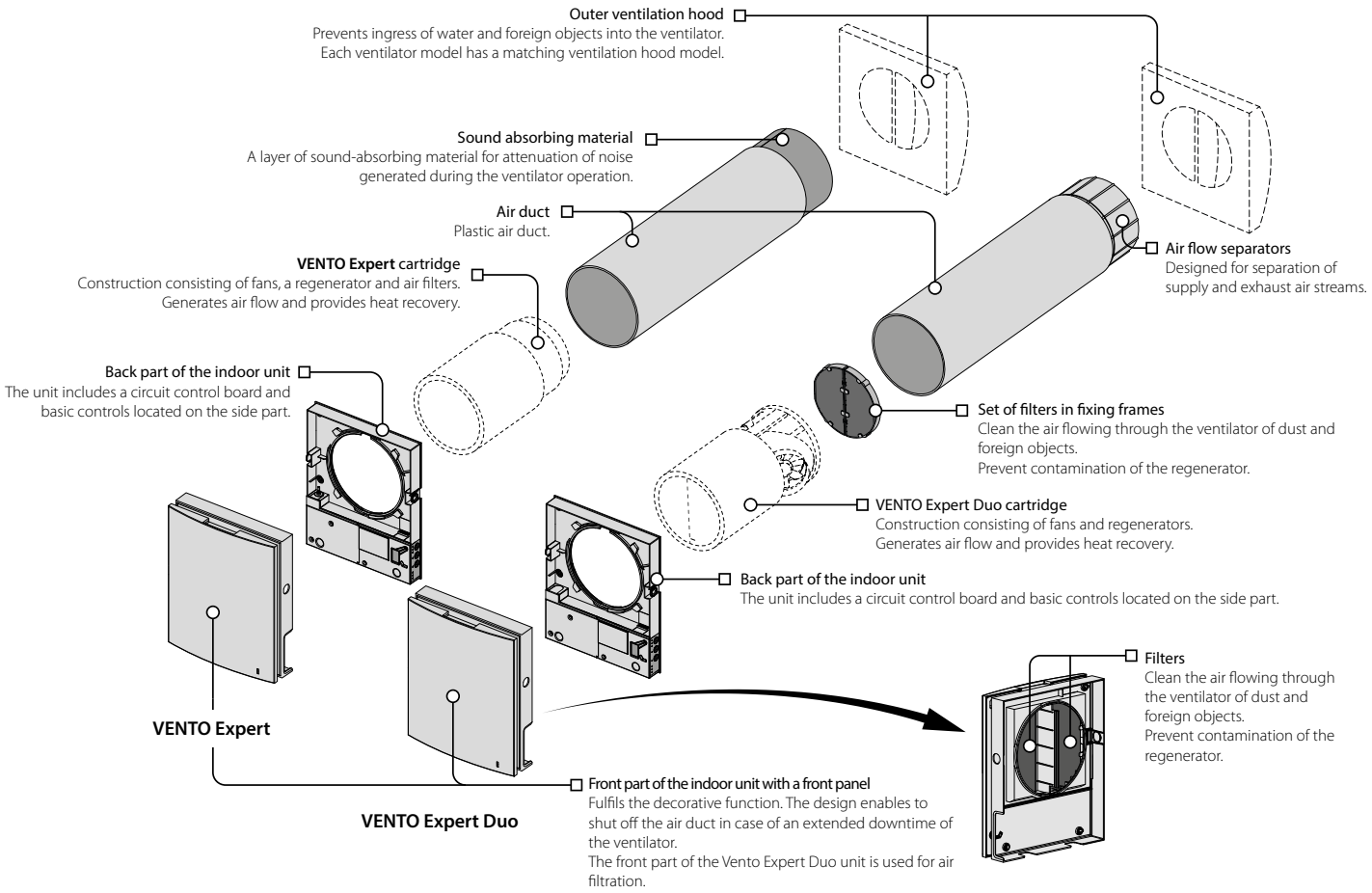

Vento Expert A50-1 Pro LOUVER SHUTTERS OPERATION PRINCIPLE

RA1 version is equipped with automatic shutters. During the ventilator operation the automatic shutters open and let the air flow freely through the ventilator. The automatic shutters are closed for 2 minutes at the ventilator shut down.

WARNING! In case of supplying power to the ventilator when the frontal part of the indoor unit is removed, no power is supplied to the actuator and its rod is not lifted to avoid damage. After installing the front part of the indoor unit into place, the louver actuator will start operating normally.

The shutters are closed

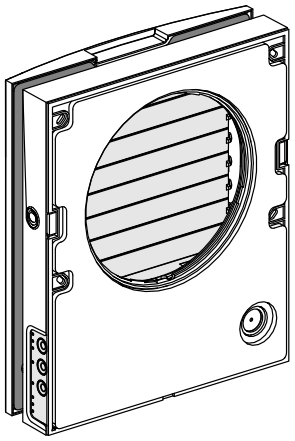

The shutters are open

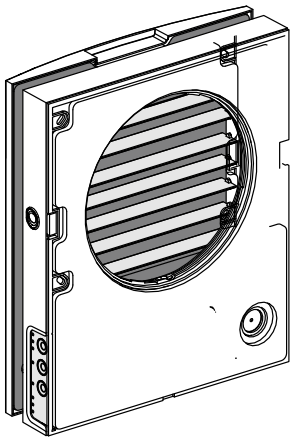

VENTILATOR OPERATION MODES

Vento Expert A50-1 Pro/Pro3	Vento Expert Duo A30-1 Pro
Ventilation: the ventilator runs either in extract or supply mode at a set speed. In this mode, when two ventilators are installed, one of them supplies and the other one extracts the air. **Boost:** the ventilator goes to the maximum speed without changing the operation mode. **Regeneration:** the ventilator runs in two cycles, 70 seconds each, with heat and humidity regeneration. • **Cycle I**. Warm stale air is extracted from the room and flows through the ceramic regenerator, which gradually absorbs heat and humidity. In 70 seconds, as the ceramic regenerator gets warmed, the ventilator is switched to supply mode. • **Cycle II**. Fresh intake air from outside flows through the ceramic regenerator, absorbs accumulated moisture and is heated up to the room temperature. In 70 seconds, as the ceramic regenerator gets cooled down, the ventilator is switched to air extract mode and the cycle is renewed. If two ventilators are installed, they operate with opposite rotation directions in this mode. While one ventilator supplies air, the other one extracts it.	**Ventilation:** one of the ventilator fans operates in the air extract mode and the other one operates in the air supply mode at a set speed. The fans do not change their rotation direction. **Boost:** if the sensor is actuated, the ventilator follows one of two functioning algorithms set via the DIP switch during the ventilator setup. For details, see page 14. The DIP switch is set to OFF: the ventilator runs in the extract mode at the third speed (both fans run in the extract mode). The DIP switch is set to ON: the ventilator switches to maximum speed without changing the operation mode. **Regeneration:** one of the ventilator fans operates in the air extract mode and the other one operates in the air supply mode. The fans change their rotation direction every 70 seconds.

MOUNTING AND SET-UP

READ THE USER'S MANUAL BEFORE INSTALLING THE UNIT.

DO NOT BLOCK THE AIR DUCT OF THE INSTALLED VENTILATOR WITH DUST ACCUMULATING MATERIALS, SUCH AS CURTAINS, CLOTH SHUTTERS, ETC. AS IT PREVENTS AIR CIRCULATION IN THE ROOM.

1. Prepare a round core hole in the outer wall. The hole size is shown in the figure below. While preparing core holes it is recommended to make preparations for layout of the power cable and other required cables.

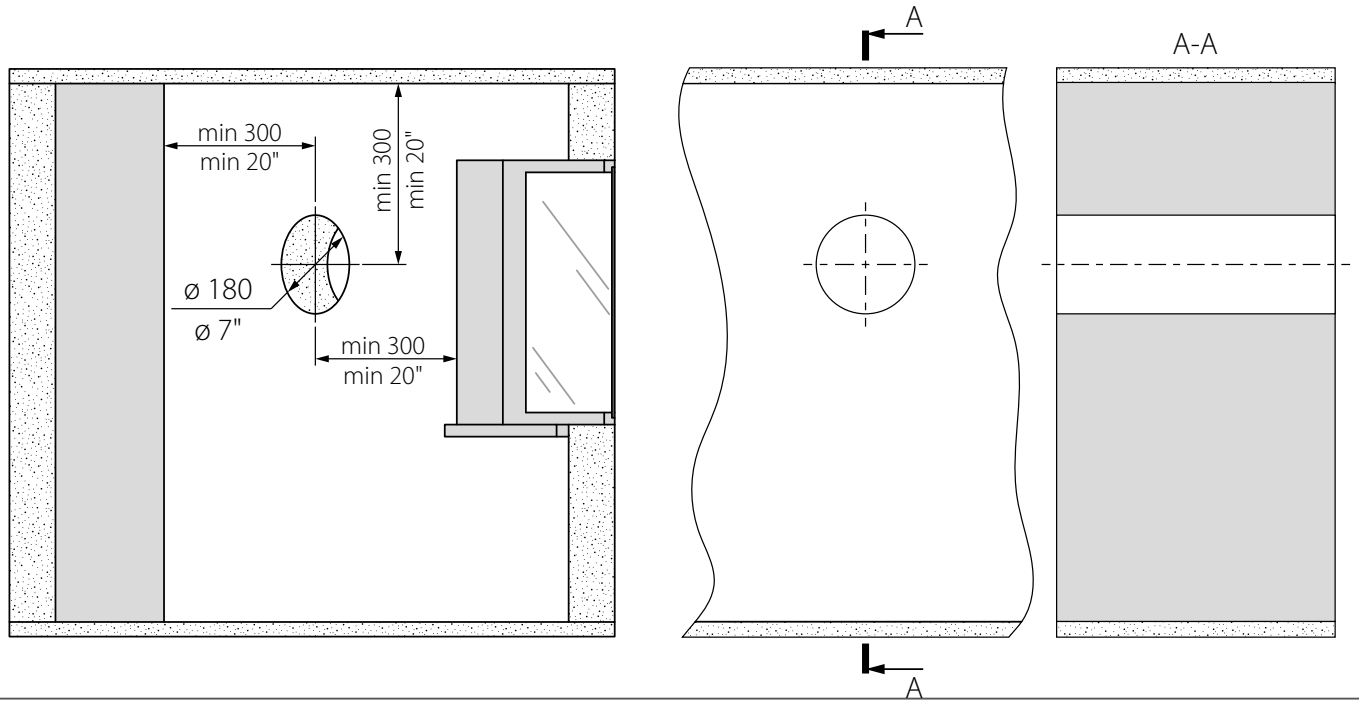

2. Install the air duct in the wall and fix it with mounting foam. The air duct end must protrude for the distance that enables installation of the outer ventilation hood (see the User's manual for the outer ventilation hood).

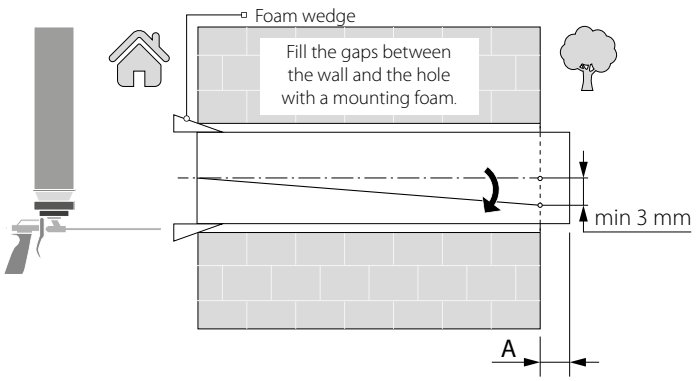

Install the air duct in the wall in such a way so it protrudes from the wall surface for maximum 3 mm or is flush with the wall.
Install the air duct with the minimum slope 3 mm downwards.
On the outer wall side the air duct end must protrude to a distance that enables installation of the outer ventilation hood. Distance A is stated in the installation instruction for the ventilation hood.

3. Stick the delivered cardboard master plate on the indoor wall using a mounting tape. The large opening in the master plate must be axially aligned with the air duct. For aligning the master plate with respect to the horizon line it is recommended to use a builder's level. Then mark the fastening holes for installation of the supplied dowels and drill the holes to a required depth.
Route the power cable from the wall outside through the specially marked opening on the master plate.

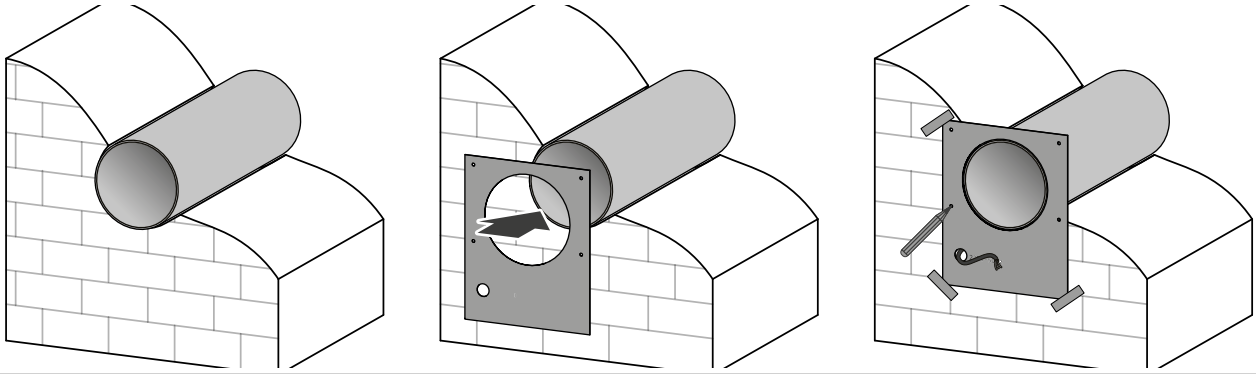

4. Unlatch and detach the front part of the indoor unit from its back part.

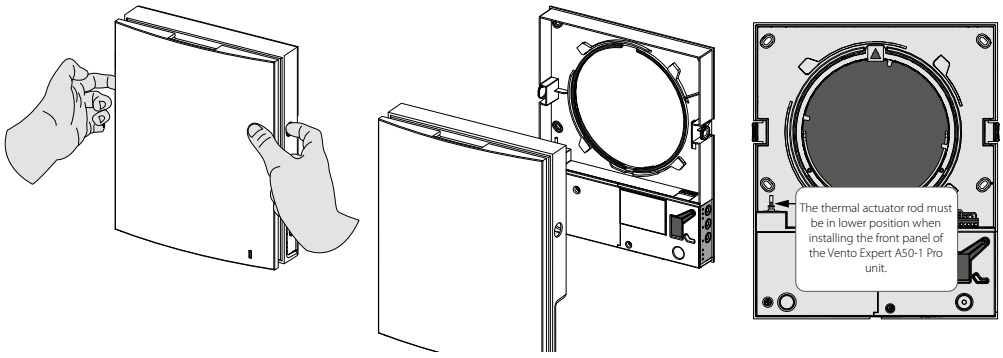

5. Fix the back part of the indoor unit on the wall with the screws supplied with the mounting kit of the ventilator.
Remove the two retaining screws from the left transparent cover to enable access to the terminals.

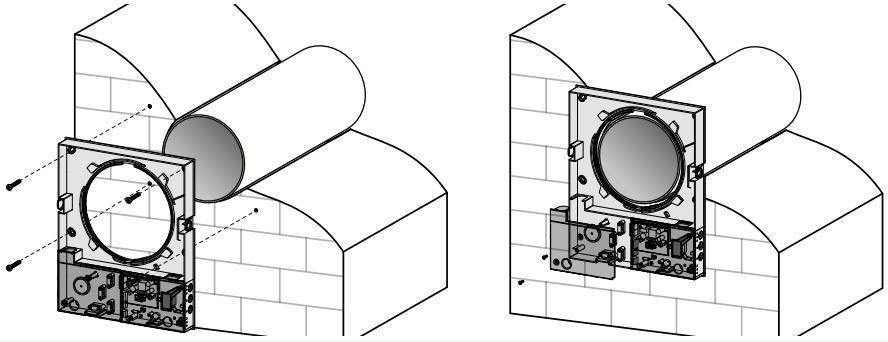

6. Route the power cable as figured below and connect the ventilator to power mains in compliance with the external wiring diagram, refer to page 12.
Fix the power cable and the signal cables with cable clamps. After completion of the electrical connection re-install the transparent cover to its place.

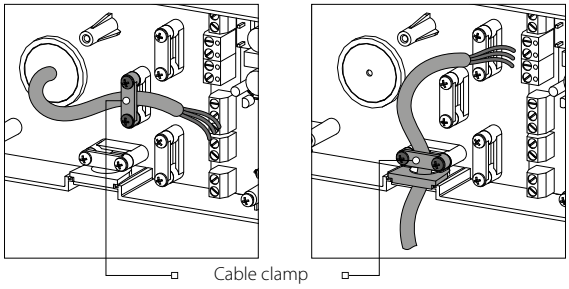

7. Install the cartridge into the air duct as figured below. The pointer must be directed upwards. Then fix the wire with the protruding clamp and connect the socket connector to the circuit board.

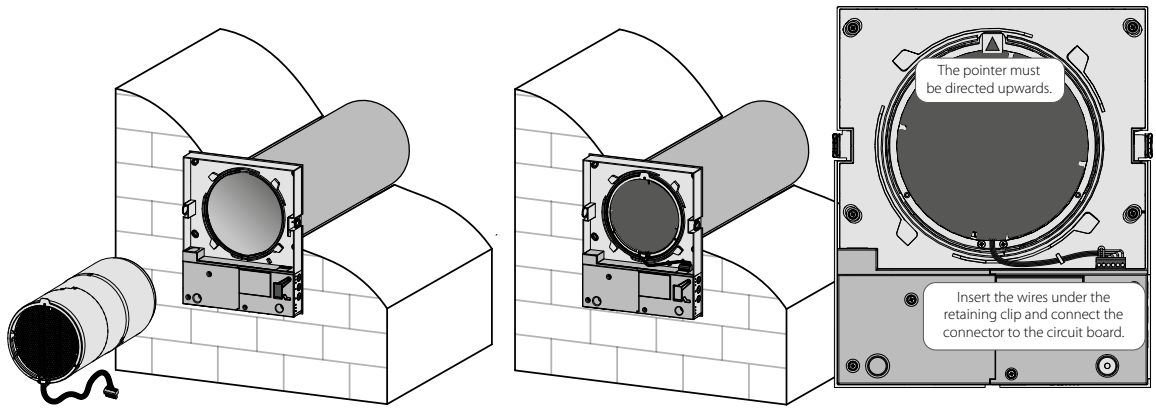

8. Install the front part of the indoor unit. The thermal actuator rod must be in lower position when installing the front panel, as shown in the figure in Section 4 on page 10.

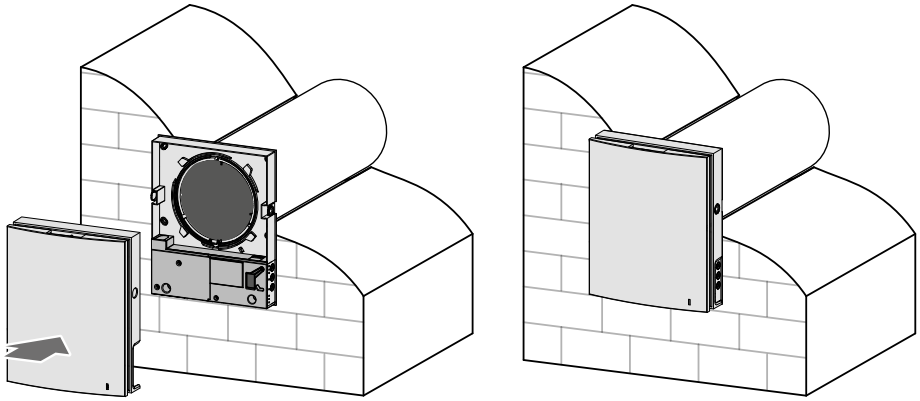

Vento Expert A50-1 Pro/Pro3

9. Insert the sound absorbing material into the air duct from the outside.
Roll the layer of the sound absorbing material to match the air duct diameter. The protecting paper layer must be outside.
Insert the sound absorbing roll into the cartridge against stop.
Make a mark at the end of the air duct, remove the material and cut the roll as marked.
After that insert the ready roll into the air duct.

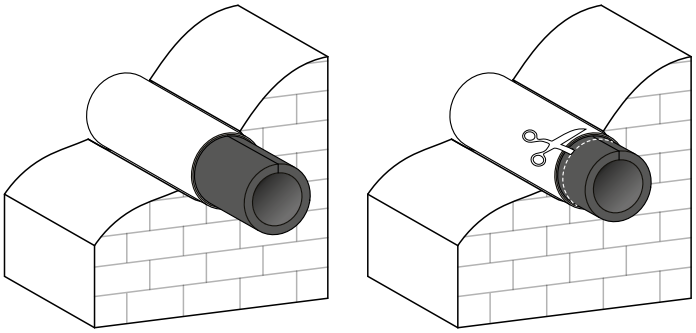

Vento Expert Duo A30-1 Pro

9. Install the sectional air flow separators from the outside. Insert a required number of the air flow separators in the air duct until they reach the cartridge. Mark the last air flow separator to be flush with the air duct face, remove it from the air duct and cut the excessive part of the last air flow separator. Tighter fixation is provided if the air flow separator protrudes to some distance.
Install the adjusted air flow separators in the air duct.

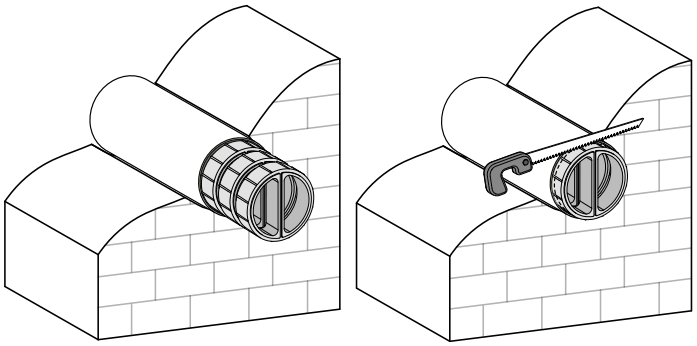

10. Install the outer ventilation hood. For this, see the user's manual for the hood.

CONNECTION TO POWER MAINS

POWER OFF THE POWER SUPPLY PRIOR TO ANY OPERATIONS WITH THE UNIT.
THE UNIT MUST BE CONNECTED TO POWER SUPPLY BY A QUALIFIED ELECTRICIAN.
THE RATED ELECTRICAL PARAMETERS OF THE UNIT ARE GIVEN ON THE MANUFACTURER'S LABEL.

The ventilator is rated for connection to single-phase AC 100-240 V 50/60 Hz power mains.
Connect the unit to power mains through the external automatic switch with a magnetic trip integrated into the fixed wiring system. The tripping current of the circuit breaker is selected based on the electrical characteristics shown on the label of the fan casing.
For electric installations use insulated, durable and heat-resistant electric leads (cables, conductors) with the minimum cross section 0.5 up to 0.75 mm^2 for the power cable and 0.25 mm^2 for the control cables. The cable cross-section is given for reference only. The actual conductor cross-section selection must be based on its type, maximum permissible heating, insulation, length and installation method.
Use copper wires for all the electric connections!

Connect the ventilator to power mains in compliance with the wiring diagram.

The ventilator design enables connecting external devices with a normally open contact (NO-contact), such as an external CO_2 sensor, a humidity sensor, a switch, etc.
When the normally open contact of the external device is closed, the ventilator goes to a maximum speed.

The ventilators can be connected in series and in parallel with a central control by the primary ventilator.

In case of in series or in parallel connection of several ventilators power is supplied either from a previous ventilator or from power mains.

EXTERNAL CONNECTIONS DIAGRAM

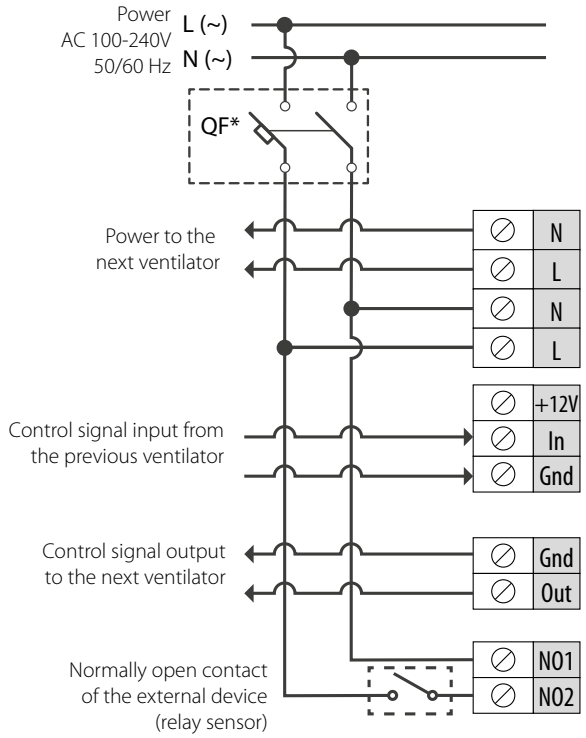

WIRING DIAGRAM FOR IN SERIES CONNECTION

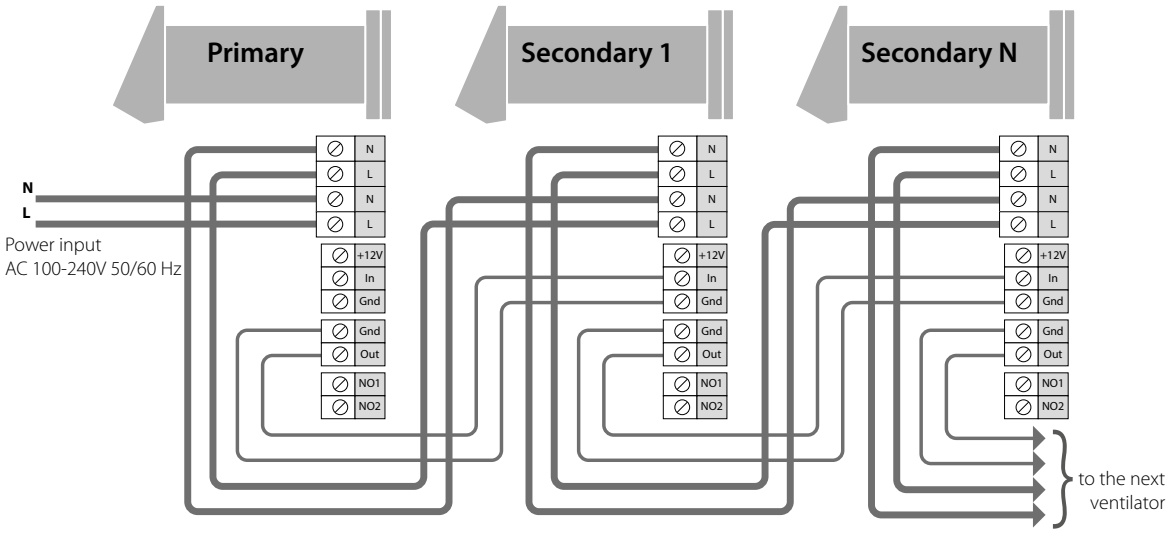

WIRING DIAGRAM FOR IN PARALLEL CONNECTION

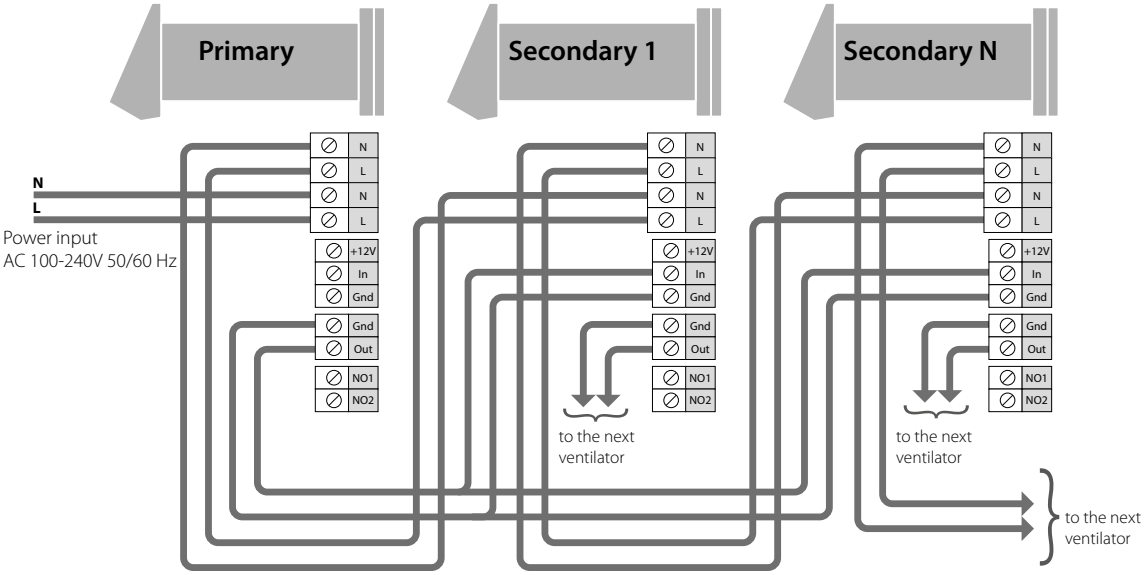

VENTILATOR SET-UP

Prior to operating the ventilator set it up using the DIP switch. It is located on the controller circuit board. To access the DIP switch, take off the front panel of the indoor unit and uplift the rubber plug that covers the switch.

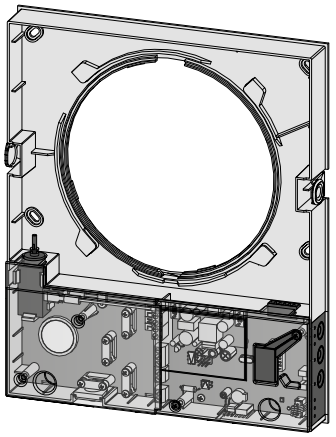

Open the rubber plug

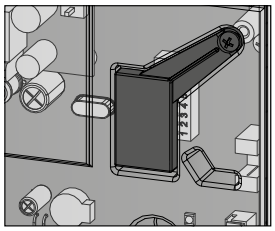

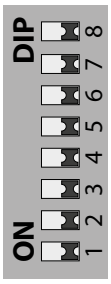

DIP switch
under the plug

POSITIONING OF THE DIP SWITCHES

1	**Turning the ventilator off is allowed**. The switch position enables switching the ventilator off with the button on the side control panel.
1	**Turning the ventilator off is not allowed.** The switch position disables switching the ventilator off with the button on the side control panel.

Vento Expert A50-1 Pro/Pro3		Vento Expert Duo A30-1 Pro	
Fan rotation direction. For controlled ventilation it is recommended to install the ventilators pairwise and integrate them in a group using a signal cable. Set one half of the connected units into supply mode and the other half into extract mode.		**Boost mode setup.** When the humidity sensor or the external relay is triggered, one of two operation algorithms starts.	
2	In the Ventilation mode the ventilator supplies the air to the room. In the Regeneration mode the ventilator starts operating first in supply mode.	2	**OFF:** the ventilator runs in the extract mode at the third speed (both fans run in the extract mode).
2	In the Ventilation mode the ventilator extracts the air from the room. In the Regeneration mode the ventilator starts operating first in extract mode.	2	**ON:** the ventilator switches to maximum speed without changing the operation mode.

Humidity sensor set value. The humidity sensor measures the extract air humidity. If the extract air humidity is above the set point, the ventilator switches to Speed III. As humidity drops down to the set point, the ventilator changes to pre-set speed after elapsing of the time set on the turn-on delay timer.

Humidity control is disabled	Set value 40 %	Set value 50 %	Set value 60 %	Set value 70 %	Set value 80 %
5 4 3	5 4 3	5 4 3	5 4 3	5 4 3	5 4 3

Delay timer. During activation of the humidity sensor or any other external device the ventilator switches to higher speed. After normalization of the indoor humidity level or any other air parameters the ventilator will switch to the previous mode after the set time.

Time delay 0 min	Time delay 5 min	Time delay 15 min	Time delay 30 min
7 6	7 6	7 6	7 6

VENTILATOR CONTROL

The ventilator can be operated with the remote control or the control buttons on the side part of the indoor unit, as figured below.
In case of in series or in parallel connection, the signal from a control unit is received by the first ventilator (Primary) only.

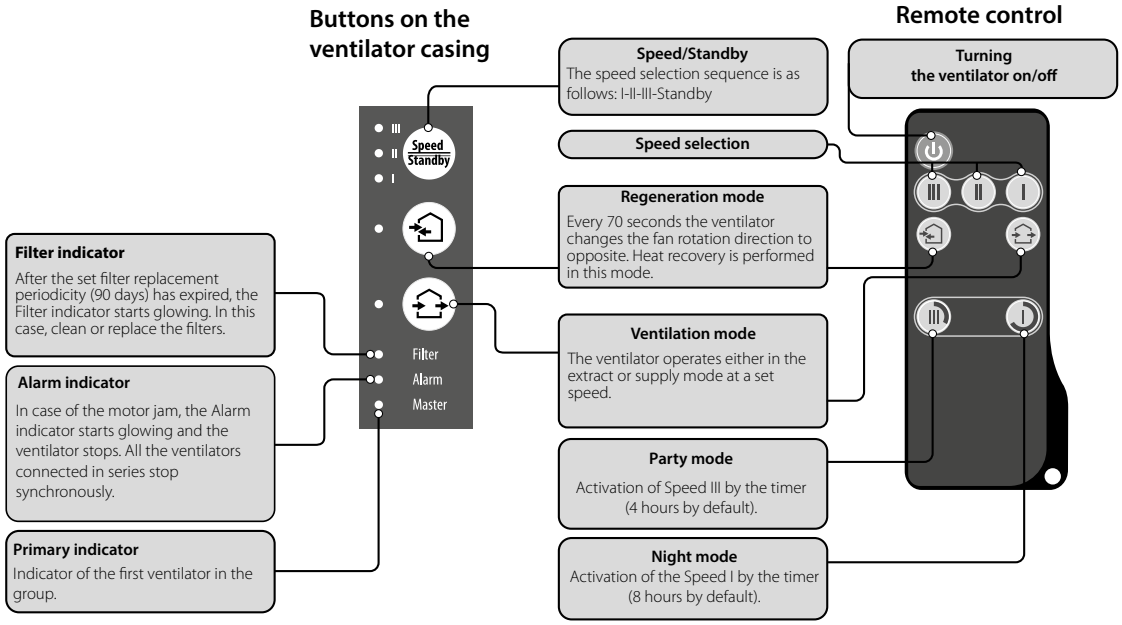

VENTILATOR CONTROL WITH THE BUTTONS ON THE INDOOR UNIT

	The speed selection sequence is as follows: I-II-III-Standby. All the units integrated in a single network operate according to the speed settings of the Primary unit. I: permanent indicator glowing indicates operation of the unit at Speed I. The indicator blinks when the first speed timer is activated. I and II: permanent glowing of the indicators I and II indicates operation of the unit at Speed II. I, II and III: permanent glowing of the indicators I, II and III indicates operation of the ventilator at Speed III. Blinking of the indicators I, II and III indicates activation of the timer for Party mode or the turn-off delay timer triggered by any connected external sensors or the integrated humidity sensor.
	**Regeneration mode** Vento Expert A50-1 Pro/Pro3 The rotation direction of the fan changes to opposite every 70 seconds. Heat recovery is performed in this mode. Vento Expert Duo A30-1 Pro The rotation direction of both fans changes to opposite every 70 seconds. Heat recovery is performed in this mode.
	**Ventilation mode** Vento Expert A50-1 Pro/Pro3 The ventilator operates in permanent supply or extract mode at a set speed. The air flow direction depends on positioning of the DIP switch (set to air extract by default). Vento Expert Duo A30-1 Pro One fan operates in the air extract mode and the other fan operates in the air supply mode at a set speed. The fans do not change their rotation direction.
Filter	**Contamination indicator of filters.** 90 days (continuous operation) after installation of the cartridge the Filter contamination indicator starts glowing. In this case, clean or replace the filters (see the "Technical maintenance" section). In case of in-series connection, the Primary ventilator indicator has a steady glow and the indicator of the ventilator requiring filter replacement blinks. To reset the filter timer, turn the DIP switch No. 8 on for not less than 3 seconds and then turn it off.
Alarm	**Alarm indicator for emergency shutdown of the unit.** Permanent glowing of the Alarm indicator of the Primary unit indicates an alarm in the network of the connected ventilation units. Its blinking indicates shutdown of a specific ventilation unit in the network. In case of an emergency shutdown of a Vento Expert A50-1 Pro/Pro3 unit in the network the defective ventilation unit is marked with the blinking Alarm indicator. All the connected Vento Expert A50-1 Pro/Pro3 ventilation units are also stopped. In case of an emergency shutdown of the Vento Expert Duo A30-1 Pro unit, the defective ventilation unit is marked with the blinking Alarm indicator. The defective ventilation unit shuts down and the other connected ventilation units continue their operation.
Primary	**Primary unit indicator.** Permanent glowing of the indicator shows the leading unit in the network (Primary unit). Indicator blinking indicates the driven unit (Secondary unit) and no connection to the Primary unit. No glowing of the lamp indicator means that this ventilation unit is a Secondary ventilation unit and it is connected to a Primary unit.

REMOTE CONTROL OF THE VENTILATION UNIT

	Turning the ventilator on/off. The unit may be turned off only if it is enabled by the settings. Reset of alarm and timer settings.
	Ventilator speed selection: III-II-I speeds respectively.
	**Regeneration mode** Vento Expert A50-1 Pro/Pro3 The rotation direction of the fan changes to opposite every 70 seconds. Heat recovery is performed in this mode. Vento Expert Duo A30-1 Pro The rotation direction of both fans changes to opposite every 70 seconds. Heat recovery is performed in this mode.
	**Ventilation mode** Vento Expert A50-1 Pro/Pro3 The ventilator operates in permanent supply or extract mode at a set speed. The air flow direction depends on positioning of the DIP switch (set to air extract by default). Vento Expert Duo A30-1 Pro One fan operates in the air extract mode and the other fan operates in the air supply mode at a set speed. The fans do not change their rotation direction.
	Timer buttons:  Party mode: 4 hours at the Speed **III**.  Night mode: 8 hours at the Speed **I** Upon expiration of the set time period the ventilator reverts to a pre-set speed. Press any button of the manual speed setting to deactivate the timer.

AIR FLOW BLOCKING FOR Vento Expert A50-1 Pro/Pro3

Press the front panel to close the air duct. The fan turns off automatically. The unit functionality is not changed. To open the air duct, pull the front panel while holding the special recesses. The fan starts operating according to the actual speed setting.

Air duct shut-off

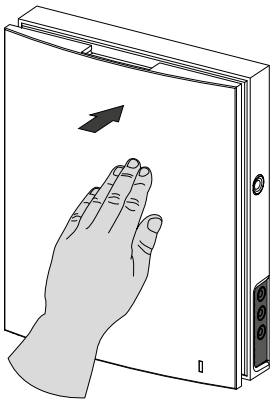

Air duct opening

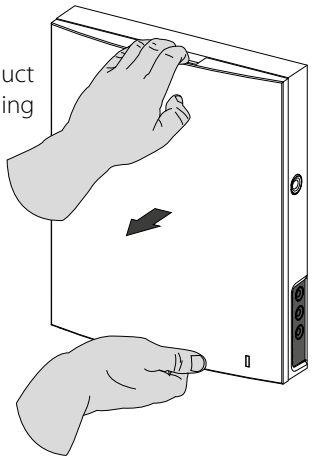

The front panel incorporates an operating LED indicator. During the dark time the indicator light intensity drops down.

AIR FLOW BLOCKING FOR Vento Expert Duo A30-1 Pro

Press the side tabs to detach the front part of the indoor unit from its back part and close the air duct.
Then gently unlatch and remove the front panel from the front part of the indoor unit. Remove the air flow separator by pulling one of the side clamps.
Install the front part of the indoor unit into place. Install the front panel on the front part of the indoor unit and press it gently to close the air duct.
The fans of the ventilator will stop automatically. The unit functionality is not changed.
Open the air duct in the reverse order. The fans start operating according to the actual speed setting.

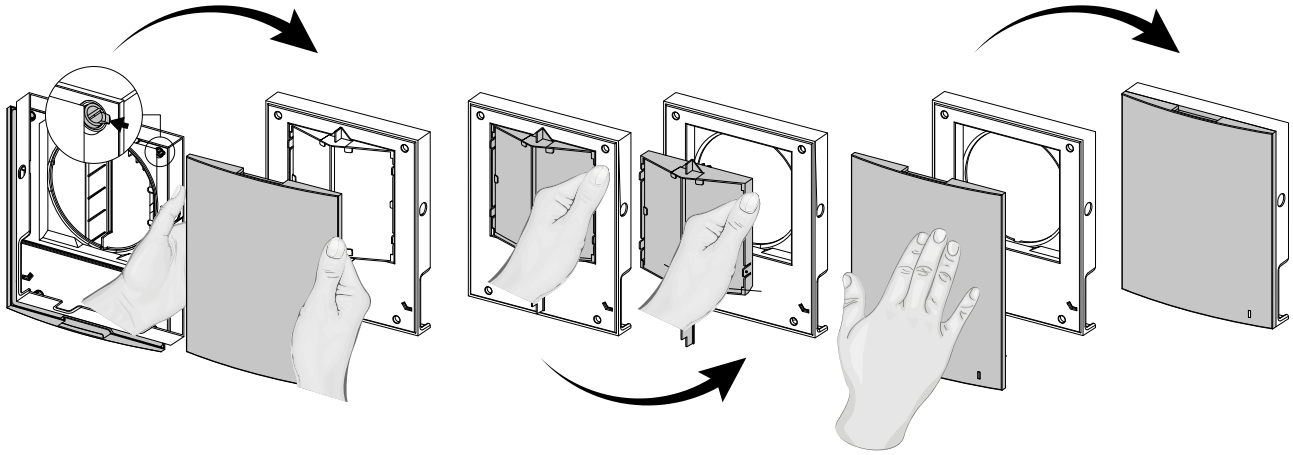

The front panel incorporates an operating LED indicator. During the dark time the indicator light intensity drops down.

TECHNICAL MAINTENANCE

Maintenance of the ventilator means regular cleaning of the ventilator surfaces of dust and cleaning and/or replacement of the filters. After the set filter replacement periodicity (90 days) has expired the **Filter** indicator starts glowing.
Before performing technical maintenance turn off the ventilator using the remote control or the buttons on the indoor unit. Then disconnect it from the power supply using the circuit breaker. After doing so, act as follows:

Vento Expert Duo A30-1 Pro

1. Press the latches on the side of the indoor control unit to take off the front part. Then open the latches and remove the front panel. Remove the filters for cleaning. Perform all the above operations in the reverse order after cleaning.

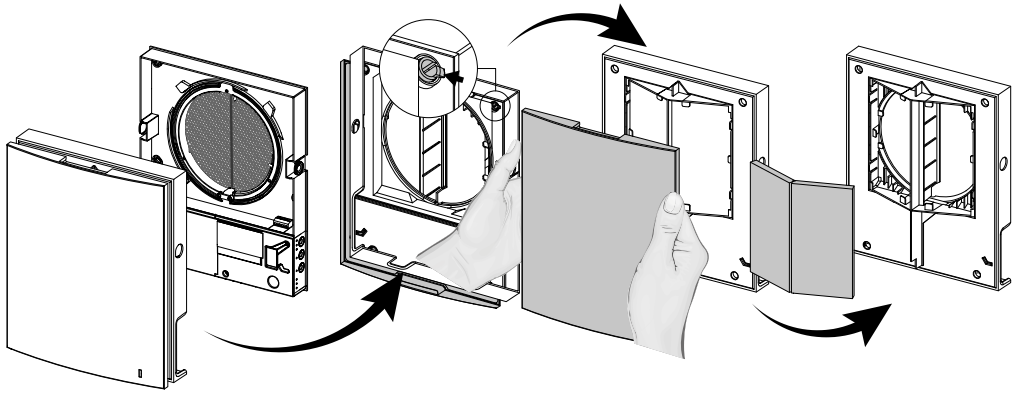

Vento Expert A50-1 Pro/Pro3

1. Press the latches on the side of the indoor control unit to take off the front part.
Please make sure the louver actuator rod is in lower position during re-installation of the front panel. If the thermal actuator rod is up, please wait for about 2 minutes until it goes down.

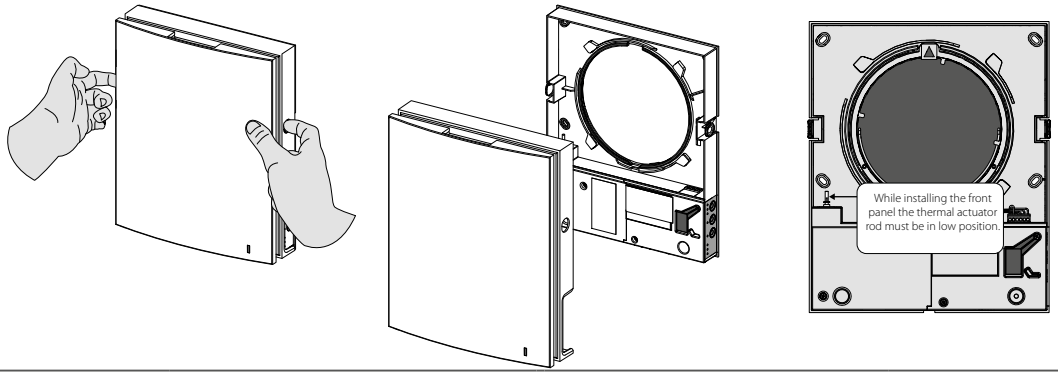

2. Disconnect the connector from the circuit board. Do not remove the connector by pulling the wires. Use a flat screwdriver to uplift it, if required.

Vento Expert Duo A30-1 Pro

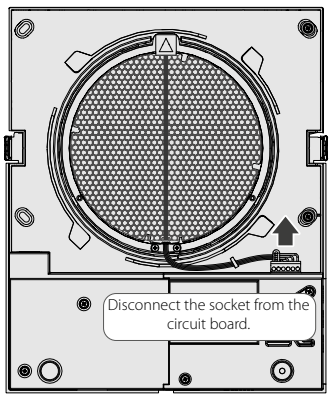

Vento Expert A50-1 Pro/Pro3

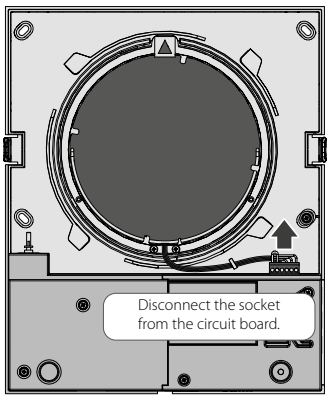

Do not pull on the electric cable!

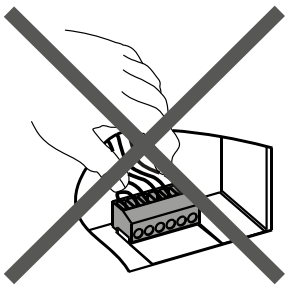

Use a flat screwdriver to disconnect the socket.

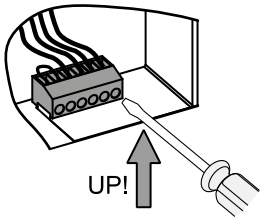

3. Remove the cartridge from the air duct by pulling the cord.
Clean the filters as they get clogged, but not less than once in three months.

Vento Expert A50-1 Pro/Pro3

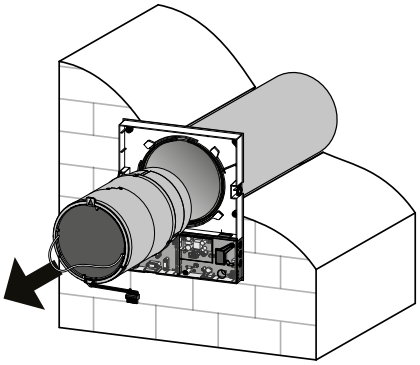

Vento Expert Duo A30-1 Pro

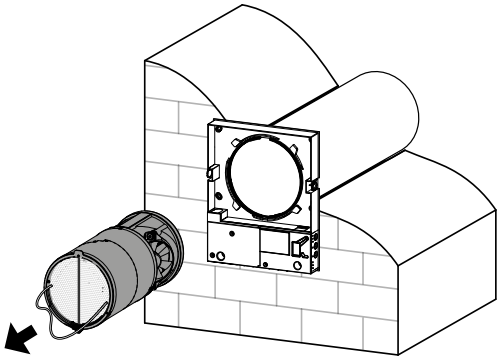

4. Wash the filters and let them dry out completely. Install the dry filters back and reassemble the unit. Vacuum cleaning is allowed.
The filter rated service life is 3 years.
For new filters contact the Seller.

Some dust may accumulate on the regenerator block even in case of regular maintenance of the filters.
For effective heat recovery clean the regenerator with a vacuum cleaner at least once a year.

To reset the filter timer, connect the ventilator to the power supply using the circuit breaker before installing the front panel of the indoor unit into its place. After that turn the DIP switch No.8 on for not less than 3 seconds and then turn it off. For details, see page 14.

If necessary, the remote control battery may be replaced.
In case of a long usage of the remote control, the battery must be replaced.
No response of the unit for pressing the remote control buttons indicates the need to replace the battery.
The battery type is CR2025.
Remove the holder with the battery from the lower part of the remote control.
Replace the battery and install the holder with a new battery back to the remote control.

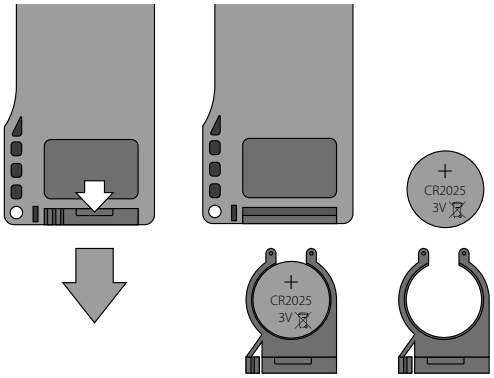

TROUBLESHOOTING

POSSIBLE REASONS AND TROUBLESHOOTING

Problem	Possible reasons	Troubleshooting
When switching on the ventilator, the fan does not start.	No power supply.	Make sure the power supply line is connected correctly, otherwise troubleshoot the connection error.
	The motor is jammed, the impeller blades are soiled.	Turn the ventilator off. Troubleshoot the motor jam and impeller clogging. Clean the blades. Restart the ventilator.
Circuit breaker tripping during the ventilation unit start-up.	Overcurrent as a result of short circuit in the electric line.	Turn the ventilator off. Contact the Seller for further information.
Low air flow.	Low set fan speed.	Set higher speed.
	The filters, the fan or the regenerator are clogged.	Clean or replace the filter. Clean the fan and the regenerator.
Noise, vibration.	The impeller is clogged.	Clean the impeller.
	Loose screw connection of the unit casing or the outer ventilation hood.	Tighten the screws of the ventilator or the outer ventilation hood.

STORAGE AND TRANSPORTATION REGULATIONS

- Store the unit in the manufacturer's original packaging box in a dry closed ventilated premise with temperature range from +5 °C to + 40 °C and relative humidity up to 70 %.
- Storage environment must not contain aggressive vapors and chemical mixtures provoking corrosion, insulation, and sealing deformation.
- Use suitable hoist machinery for handling and storage operations to prevent possible damage to the unit.
- Follow the handling requirements applicable for the particular type of cargo.
- The unit can be carried in the original packaging by any mode of transport provided proper protection against precipitation and mechanical damage. The unit must be transported only in the working position.
- Avoid sharp blows, scratches, or rough handling during loading and unloading.
- Prior to the initial power-up after transportation at low temperatures, allow the unit to warm up at operating temperature for at least 3-4 hours.

MANUFACTURER'S WARRANTY

The product is in compliance with EU norms and standards on low voltage guidelines and electromagnetic compatibility. We hereby declare that the product complies with the provisions of Electromagnetic Compatibility (EMC) Directive 2014/30/EU of the European Parliament and of the Council, Low Voltage Directive (LVD) 2014/35/EU of the European Parliament and of the Council and CE-marking Council Directive 93/68/EEC. This certificate is issued following test carried out on samples of the product referred to above.
The manufacturer hereby warrants normal operation of the unit for 24 months after the retail sale date provided the user's observance of the transportation, storage, installation, and operation regulations. Should any malfunctions occur in the course of the unit operation through the Manufacturer's fault during the guaranteed period of operation, the user is entitled to get all the faults eliminated by the manufacturer by means of warranty repair at the factory free of charge. The warranty repair includes work specific to elimination of faults in the unit operation to ensure its intended use by the user within the guaranteed period of operation. The faults are eliminated by means of replacement or repair of the unit components or a specific part of such unit component.

The warranty repair does not include:
- routine technical maintenance
- unit installation/dismantling
- unit setup

To benefit from warranty repair, the user must provide the unit, the user's manual with the purchase date stamp, and the payment paperwork certifying the purchase. The unit model must comply with the one stated in the user's manual. Contact the Seller for warranty service.

The manufacturer's warranty does not apply to the following cases:
- User's failure to submit the unit with the entire delivery package as stated in the user's manual including submission with missing component parts previously dismounted by the user.
- Mismatch of the unit model and the brand name with the information stated on the unit packaging and in the user's manual.
- User's failure to ensure timely technical maintenance of the unit.
- Damage to the unit casing and internal components caused by the user.
- Redesign or engineering changes to the unit.
- Replacement and use of any assemblies, parts and components not approved by the manufacturer.
- Unit misuse.
- Violation of the unit installation regulations by the user.
- Violation of the unit control regulations by the user.
- Unit connection to power mains with a voltage different from the one stated in the user's manual.
- Unit breakdown due to voltage surges in power mains.
- Discretionary repair of the unit by the user.
- Unit repair by any persons without the manufacturer's authorization.
- Expiration of the unit warranty period.
- Violation of the unit transportation regulations by the user.
- Violation of the unit storage regulations by the user.
- Wrongful actions against the unit committed by third parties.
- Unit breakdown due to circumstances of insuperable force (fire, flood, earthquake, war, hostilities of any kind, blockades).
- Missing seals if provided by the user's manual.
- Failure to submit the user's manual with the unit purchase date stamp.
- Missing payment paperwork certifying the unit purchase.

FOLLOWING THE REGULATIONS STIPULATED HEREIN WILL ENSURE A LONG AND TROUBLE-FREE OPERATION OF THE UNIT

USER'S WARRANTY CLAIMS SHALL BE SUBJECT TO REVIEW ONLY UPON PRESENTATION OF THE UNIT, THE PAYMENT DOCUMENT AND THE USER'S MANUAL WITH THE PURCHASE DATE STAMP

CERTIFICATE OF ACCEPTANCE

Unit Type	Single-room reversible energy recovery ventilator
Model	
Serial Number	
Manufacture Date	
Quality Inspector's Stamp	

SELLER INFORMATION

Seller	
Address	
Phone Number	
E-mail	
Purchase Date	
This is to certify acceptance of the complete unit delivery with the user's manual. The warranty terms are acknowledged and accepted.	
Customer's Signature	

Seller's Stamp

INSTALLATION CERTIFICATE

The _____ unit is installed pursuant to the requirements stated in the present user's manual.		
Company name		
Address		
Phone Number		
Installation Technician's Full Name		
Installation Date:	**Signature:**	
The unit has been installed in accordance with the provisions of all the applicable local and national construction, electrical and technical codes and standards. The unit operates normally as intended by the manufacturer.		
Signature:		

Installation Stamp

WARRANTY CARD

Unit Type	Single-room reversible energy recovery ventilator
Model	
Serial Number	
Manufacture Date	
Purchase Date	
Warranty Period	
Seller	

Seller's Stamp



www.blaubergventilatoren.de
B139EN-06