AIR HANDLING UNITS

CONTENTS

- KOMFORT ULTRA ME 3
- KOMFORT ERV EC 6
- KOMFORT GLA 9
- KOMFORT GRE EC 12
- KOMFORT GRE AC 15
- KOMFORT D6B 18
- ISO BOX-F 21
- BLAUAIR CFP 23

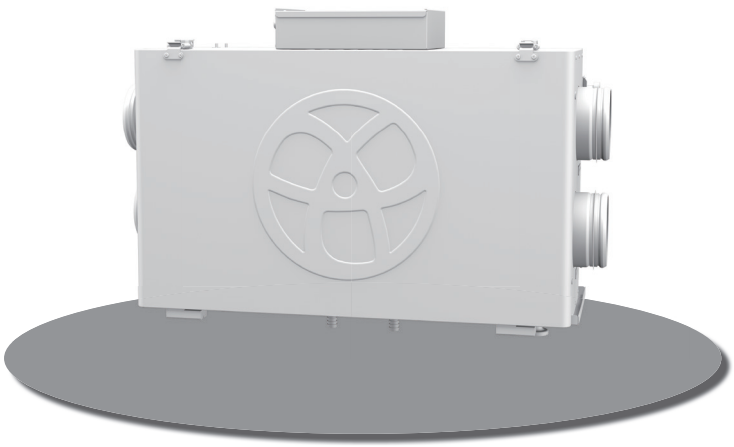

KOMFORT ULTRA ME

ERV/HRV

Features

- Suitable for supply and exhaust ventilation systems in apartments, residential buildings, and small villas.
- Equipped with a heat recovery function to minimize heat loss during ventilation.
- Flange size: Ø125mm.

Airflow:
Up to 350 m^3/h

Heat Recovery Efficiency:
Up to 79 %

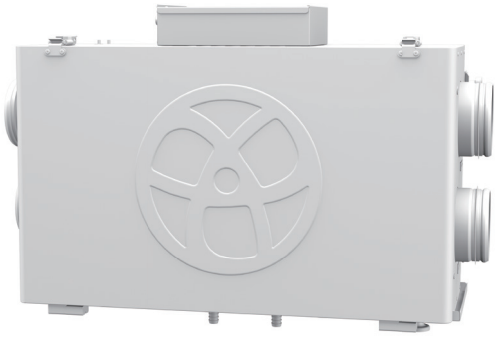

Design

- The housing is made of galvanized sheet metal with a white coating. The interior features an integrated EPP structure for insulation and noise reduction, with embedded components for easy replacement.
- The mounting bracket includes vibration-damping washers for simple installation.
- The fresh air outlet is equipped with a top-mounted flange, which has a rubber sealing ring to ensure airtight duct connections.
- A hinged inspection panel allows for easy maintenance and servicing.

Fan

- External rotor forward-curved centrifugal fan.
- High-efficiency EC fan provides powerful performance with low energy consumption, ensuring maximum energy savings and ventilation efficiency.
- Smooth EC fan operation with low noise and dynamic balance correction.

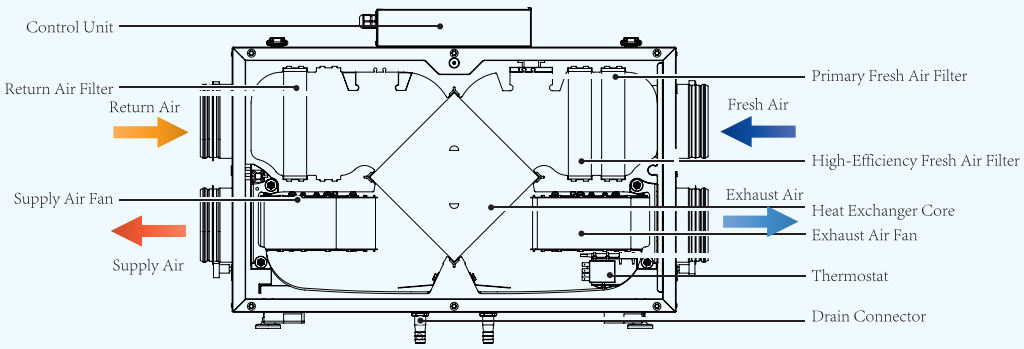

Heat Exchange

KOMFORT Ultra 250/350-H ME is equipped with an aluminum heat exchanger core for sensible heat recovery.

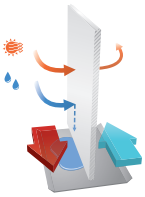

KOMFORT Ultra 250/350-E ME is equipped with a washable enthalpy heat exchanger core for total heat recovery.



- Heat Exchange Principle.The heat exchange process is based on the heat transfer effect that occurs within the heat exchanger core when warm, humid air exchanges energy between the supply and exhaust airflow.
- In winter, the heat exchanger core absorbs heat from the warm exhaust air and preheats the incoming fresh air, reducing heat loss from indoor air during the cold season. In summer, the process is reversed—the energy exchange between indoor and outdoor air allows the heat exchanger core to retain the coolness of the indoor air, optimizing the ventilation function of the air conditioning system and reducing its load.
- Anti-Frost Defrosting Protection
- The electronic anti-frost system prevents the heat exchanger core from freezing during cold seasons. When the system detects a freezing risk via temperature sensors, the supply air fan automatically shuts down, allowing the heat exchanger core to be heated by the warm exhaust air. Once the frost is eliminated, the fan resumes normal operation.

Air Filter

- The air inlet is equipped with a built-in G4 + H13 panel filter, while the air outlet has a G4 panel filter, effectively filtering both supply and exhaust air.
- G4 composite black dust filter: Captures large particles.
- H13 composite silver-ion antibacterial filter: Provides high-efficiency sterilization.

Control and Automation



- S2N1 Automation Functions:
  - Device on/off control
  - Airflow control (high, medium, low speed)
  - Filter replacement reminder
  - Speed setting for different levels
  - RS485 communication interface



- CS2 Automation Functions:
  - Device on/off control
  - Indoor air quality monitoring (only CS2-PM2.5, CO2)
  - Mode switching (manual, smart, timer)
  - In smart mode, adjusts fan speed automatically based on indoor CO2 and PM2.5 concentration(only CS2-PM2.5, CO2)
  - Airflow control (high, medium, low speed)
  - Filter replacement reminder
  - Speed setting for different levels
  - RS485 communication interface

Installation

- The product can be installed using mounting brackets on the floor, ceiling, or wall. When installing, ensure that the position is chosen carefully to allow for easy filter replacement and maintenance.
- When installing the KOMFORT Ultra 250/350-H ME, proper consideration must be given to the drainage of condensate water.
- The universal shell design allows for easy installation.

Naming Convention

Series	Device Type	Flange Direction	Airflow [m^3/h]	Heat Exchange Type	Device Type
KOMFORT	Ultra	L:Horizontal direction	350	H: Sensible heat E: Total heat	M：Metal housing E：Internal EPP

Dimensions

Model	D	B	H	H1	L	L1
Komfort Ultra 250-H(E) ME	125	285	463	63	732	836
Komfort Ultra 350-H(E) ME	125	285	463	63	732	836

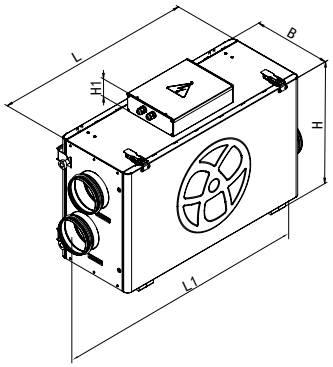

Technical Specifications

Specifications	Komfort Ultra 250-E ME	Komfort Ultra 250-H ME	Komfort Ultra 350-E ME	Komfort Ultra 350-H ME
Applicable Area [m²]	80-120	80-120	120~150	120~150
Rated Voltage	220V~50Hz	220V~50Hz	220V~50Hz	220V~50Hz
Rated Power [W]	79	79	113	113
Rated Current [A]	0.36	0.36	0.77	0.77
Airflow [m³/h]	250	250	350	350
Rated Speed [RPM]	1600	1600	2050	2050
Noise at 3M [dBA]	25-45	25-45	25-46	25-46
Operating Temperature [°C]	-25°C—60°C	-25°C—60°C	-25°C—60°C	-25°C—60°C
Housing Material	Polymer Coated Steel Plate	Polymer Coated Steel Plate	Polymer Coated Steel Plate	Polymer Coated Steel Plate
Insulation Material	One-Piece EPP Structure	One-Piece EPP Structure	One-Piece EPP Structure	One-Piece EPP Structure
Return Air Filter	G4 + G3 Composite Filter	G4 + G3 Composite Filter	G4 + G3 Composite Filter	G4 + G3 Composite Filter
Supply Air Filter	G4 + G3 Composite Silver Ion Filter, H13 Medical-Grade Composite Silver Ion Filter	G4 + G3 Composite Silver Ion Filter, H13 Medical-Grade Composite Silver Ion Filter	G4 + G3 Composite Silver Ion Filter, H13 Medical-Grade Composite Silver Ion Filter	G4 + G3 Composite Silver Ion Filter, H13 Medical-Grade Composite Silver Ion Filter
Air Duct Flange [mm]	125	125	125	125
Weight [Kg]	22	22	23	23
Sensible Heat Exchange Efficiency [%]	73	79	79	79
Latent heat exchange efficiency [%]	45	/	45	/
Heat Exchanger Core Type	Total Heat Crossflow Type	Sensible Crossflow Type	Total Heat Crossflow Type	Sensible Crossflow Type
Heat Exchanger Core Material	Polymer moisture permeable membrane (washable)	aluminum	Polymer moisture permeable membrane (washable)	aluminum

Komfort Ultra 250 ME

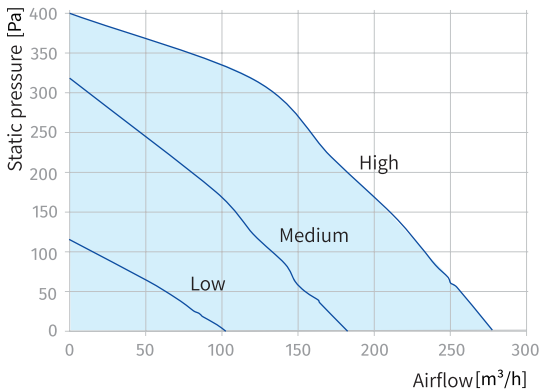

Komfort Ultra 350 ME

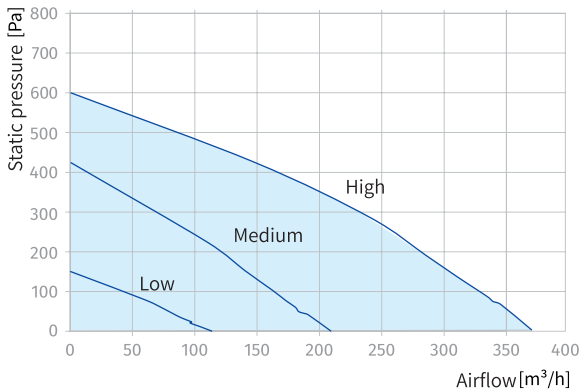

KOMFORT ERV

ERV

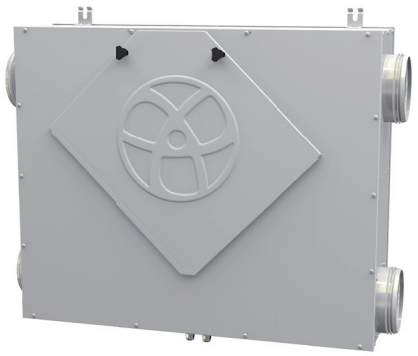

Features

- The fresh air unit is suitable for ventilation and exhaust systems in apartments, residential buildings, and small villas.
- It features heat recovery functionality, minimizing heat loss during the ventilation process.
- The flange diameter is Ø150mm.

Airflow:
Up to 450m³/h

Heat Recovery Efficiency:
Up to 87 %

Design

- The unit is made of galvanized sheet metal with built-in sound-absorbing cotton, providing both thermal insulation and noise reduction.
- It is equipped with a removable panel for easy maintenance and filter replacement.
- Both ends of the fresh air unit are fitted with flanges, each with a rubber sealing ring for airtight connection with air ducts.
- Mounting brackets are integrated into the metal casing for ceiling installation.

Fan

- External Rotor Forward-Centrifugal Fan
- High-efficiency EC fan, providing strong power with low power consumption, while achieving optimal energy savings and ventilation efficiency.
- EC fan operates smoothly with low noise.
- The fan is dynamically balanced for stable operation.

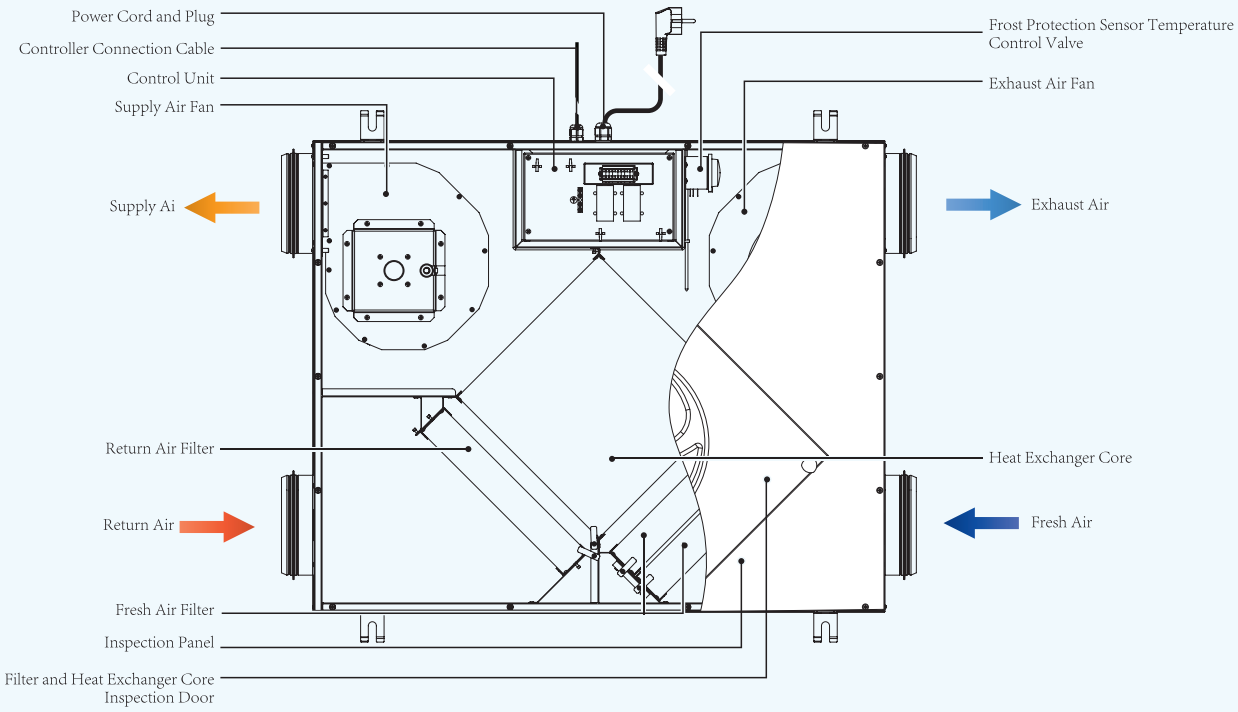

Heat Exchange

- Crossflow total heat exchanger with a washable total heat exchange core that has antibacterial properties.
- The heat exchange process is based on the heat transfer effect that occurs within the heat exchanger core when warm, humid air exchanges energy between the supply and exhaust airflow.
- In winter, the heat exchanger core absorbs heat from the warm exhaust air and preheats the incoming fresh air, reducing heat loss from indoor air during the cold season.In summer, the process is reversed—the energy exchange between indoor and outdoor air allows the heat exchanger core to retain the coolness of the indoor air, optimizing the ventilation function of the air conditioning system and reducing its load.



Air Filter

- The air inlet is equipped with a built-in G4 + H13 panel filter, while the air outlet has a G4 panel filter, effectively filtering both supply and exhaust air.
- G4 composite black dust filter: Captures large particles.
- H13 composite silver-ion antibacterial filter: Provides high-efficiency sterilization.

Control and Automation



- S2N1 Automation Functions:
  - Device on/off control
  - Airflow control (high, medium, low speed)
  - Filter replacement reminder
  - Speed setting for different levels
  - RS485 communication interface
- CS2 Automation Functions:
  - Device on/off control
  - Indoor air quality monitoring (only CS2-PM2.5, CO2)
  - Mode switching (manual, smart, timer)
  - In smart mode, adjusts fan speed automatically based on indoor CO2 and PM2.5 concentration(only CS2-PM2.5, CO2)
  - Airflow control (high, medium, low speed)
  - Filter replacement reminder
  - Speed setting for different levels
  - RS485 communication interface



Installation

- Due to the ultra-thin design of the unit, it is highly suitable for ceiling installation in spaces with limited room.
- The installation location must provide enough space for future maintenance and servicing.

Naming Convention

Series	Heat Exchanger Core Type	Motor Type	Installation Type	Airflow [m^3/h]
KOMFORT	ERV: Total Heat Exchange	EC: EC Motor	D: Ceiling Mount, Flange Horizontal	250; 350; 450

Dimensions

Model	D	B	H	L	L1
Komfort ERV EC D250P	149	704	227	854	947
Komfort ERV EC D350P	149	704	227	854	947
Komfort ERV EC D450P	149	626	227	970	1104

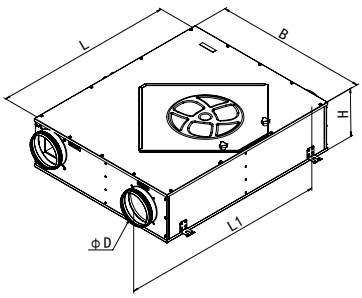

Technical Specifications

Specifications	Komfort ERV EC D250P	Komfort ERV EC D350P	Komfort ERV EC D450P
Applicable Area [m²]	80-120	120-150	150-180
Rated Voltage [V / 50-60 Hz]	220	220	220
Rated Power [W]	86	150	242
Rated Current [A]	0.39	0.68	1.1
Airflow [m³/h]	250	350	450
Rated Speed [RPM]	1500	1600	1800
Noise at 3M [dBA]	40	42	47
Operating Temperature [°C]	-25°C—40°C	-25°C—40°C	-25°C—40°C
Housing Material	Polymer Coated Steel Plate	Polymer Coated Steel Plate	Polymer Coated Steel Plate
Insulation Material	Insulation Cotton	Insulation Cotton	Insulation Cotton
Return Air Filter	G4 + G3 Composite Filter	G4 + G3 Composite Filter	G4 + G3 Composite Filter
Supply Air Filter	G4 + G3 Composite Silver Ion Filter, H13 Composite Silver Ion Filter	G4 + G3 Composite Silver Ion Filter, H13 Composite Silver Ion Filter	G4 + G3 Composite Silver Ion Filter, H13 Composite Silver Ion Filter
Air Duct Flange [mm]	149	149	149
Weight [Kg]	32	35	41
Total Heat Exchange Efficiency [%]	86	76	73
Heat Exchanger Core Type	Total Heat Crossflow Type	Total Heat Crossflow Type	Total Heat Crossflow Type
Heat Exchanger Core Material	High-Molecular Permeable Membrane (Washable)	High-Molecular Permeable Membrane (Washable)	High-Molecular Permeable Membrane (Washable)

Komfort ERV EC D250P

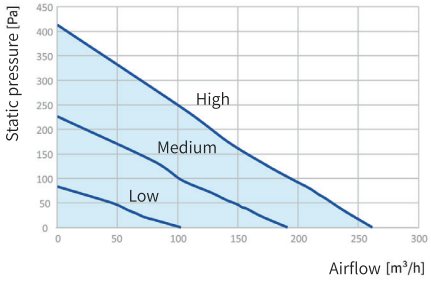

Komfort ERV EC D350P

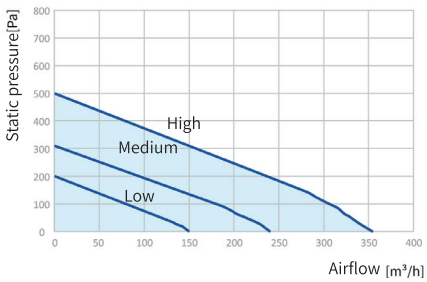

Komfort ERV EC D450P

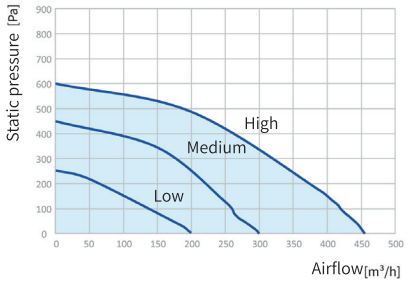

KOMFORT GLA (F)

ERV



Features

- The fresh air unit is suitable for supply and exhaust ventilation systems in apartments, residences, and small villas.
- Controlled mechanical energy-saving ventilation system.
- Equipped with heat recovery functionality to minimize heat loss during ventilation.
- Balances humidity and regulates indoor-outdoor air exchange, creating an individually controllable microenvironment.
- Flange size: Ø150mm.

Airflow:
Up to 500 m^3/h

Heat Recovery Efficiency:
Up to 75 %

Design

- Constructed with galvanized sheet metal and 5mm NBR insulation, providing both thermal insulation and noise reduction.
- A flange is mounted on the top of the fresh air unit, with a rubber sealing ring to ensure airtight connection with the air duct.
- Removable access panel allows for easy cleaning, filter replacement, and other maintenance tasks inside the unit.

Fan

- High-efficiency DC inner rotor fan.
- Provides powerful airflow with low power consumption and high efficiency.
- Low noise, stepless speed regulation, excellent startup, and speed control characteristics.
- Dynamically balanced for smooth and stable operation.

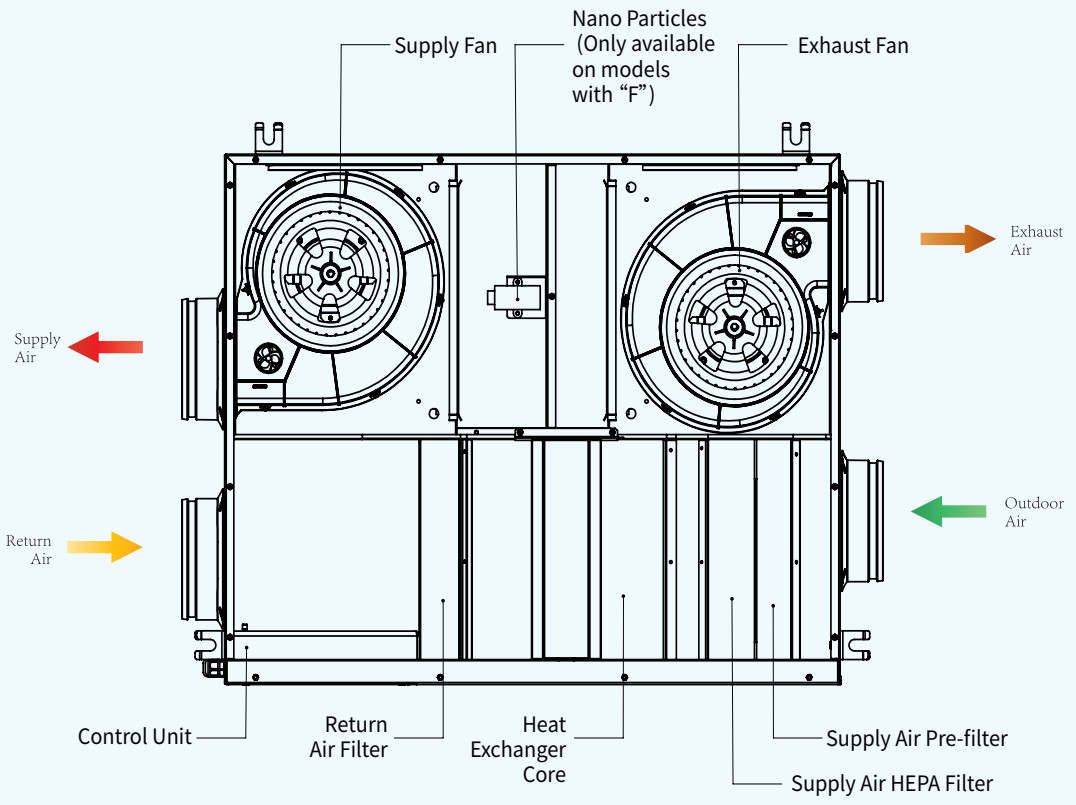

Heat Recovery

- The equipment is equipped with a counterflow washable total heat exchanger core with a polymer membrane structure, ensuring high heat recovery efficiency.
- The supply and exhaust air are completely separated as they pass through the heat exchanger core, preventing odors and contaminants from the exhaust air from mixing with the fresh air supplied indoors.
- The principle of heat exchange is based on the heat transfer effect when warm and humid air interacts within the airflow exchange inside the heat exchanger.
- In winter, the heat exchanger core absorbs heat from the exhaust indoor air and preheats the fresh air supplied indoors, reducing heat loss during cold seasons.In summer, the process works in reverse, with the heat exchanger core effectively retaining the indoor coolness during the air exchange process.
- This function optimizes the ventilation capability of the air conditioning system and reduces its load.
- The built-in anti-freeze system prevents the heat exchanger core from frosting during cold seasons.
- When the heat exchanger core receives a signal from the temperature sensor, the supply fan automatically shuts down while only the exhaust fan remains operational, allowing the heat exchanger to use the expelled warm air for heating.
- Once the frost is eliminated, the fan resumes normal operation.

Blaufion Nano Particles

- Nano particle technology utilizes particle chips to ionize and reduce water molecules in humid air, providing sterilizing effects.
- This feature is available only in devices with "F" in the model name.

Air Filter

- The air inlet is equipped with a built-in G4 + H13 panel filter, while the air outlet has a G4 panel filter, effectively filtering both supply and exhaust air.
- G4 composite black dust filter: Captures large particles.
- H13 composite silver-ion antibacterial filter: Provides high-efficiency sterilization.

Control and Automation

- The CS3N-1.5 Controller can monitor indoor temperature, humidity, and PM2.5 concentration in real-time. It comes with a ModBus RTU (RS485) interface, allowing users to connect to smart terminals (such as smart home systems) for remote monitoring of the device status. In smart mode, the unit's fan speed can be adjusted based on the indoor PM2.5 and TVOC concentration.



- The device is supplied with a 10-meter control cable for easy installation of the on-site controller.
- CS3N-1.5 Features:
  - Power on/off the device.
  - Display real-time indoor temperature, humidity, PM2.5, and TVOC data.
  - Set and control the speed of the supply and exhaust fans.
  - Select the operating mode: smart, fresh air, or single supply.
  - Filter replacement reminder.
  - Nano particle function selection (optional).
  - RS485 protocol for integration into the smart control system.
  - Remote control via APP.

Air Quality Sensors

- The device is equipped with temperature and humidity, TVOC, and PM2.5 sensors at the RA (Return Air) return air inlet; the CO_2 sensor is optional.

Installation

- Install the device on the ceiling using fixed brackets.
- The device has bottom maintenance access, so a bottom inspection opening should be reserved for filter maintenance.

Naming Rule

Series	Motor Type	Installation Method	Additional Features	Nominal Airflow [m³/h]	Maintenance Method
KOMFORT	DC	D: Ceiling-mounted, flange in horizontal direction	F:Nano particles	250; 350; 500	Side maintenance

Komfort GLA D250/D350(F)

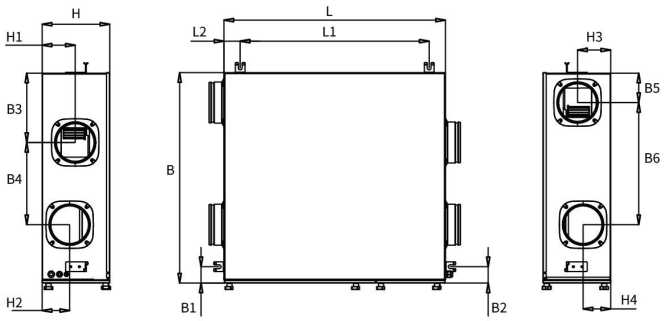

Komfort GLA D500(F)

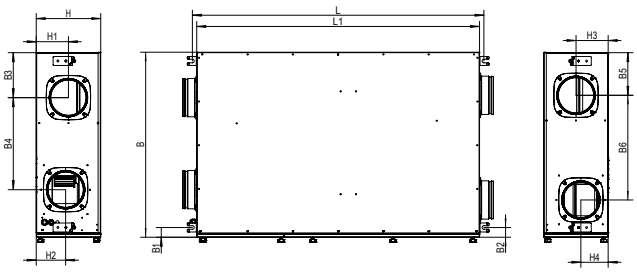

Dimensions

Model	B	B1	B2	B3	B4	B5	B6	L	L1	L2	H	H1	H2	H3	H4
KOMFORT GLA D250(F)	664	59	59	252	246	107	344	804	686	59	246	120	100	120	100
KOMFORT GLA D350(F)	764	59	59	252	299	107	444	804	686	59	246	120	100	120	100
KOMFORT GLA D500(F)	648	38	38	175	358	166	407	1100	1134	/	251	127	116	127	108

Komfort GLA D250/D350(F)

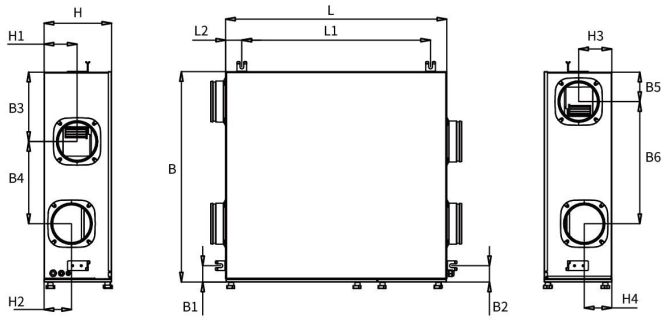

Komfort GLA D500(F)

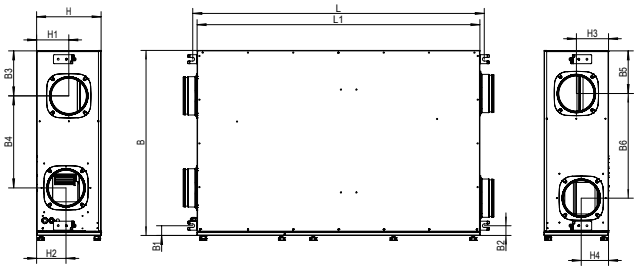

Technical Specifications

Specifications	Komfort GLA D250(F)	Komfort GLA D350(F)	Komfort GLA D500(F)
Applicable Area [m²]	80-120	120-150	150-180
Maximum Static Pressure [Pa]	380	420	400
Rated Voltage [V]	220	220	220
Rated Power [W]	90	125	280
Rated Current [A]	0.41	0.57	1.27
Airflow [m³/h]	250	350	500
External Static Pressure [Pa]	120	120	150
Operating Temperature [°C]	1—40	1—40	1—40
Noise Level [dBA]	36	38	40
Casing Material	Polymer Coated Steel Plate	Polymer Coated Steel Plate	Polymer Coated Steel Plate
Insulation Material	Insulation Cotton	Insulation Cotton	Insulation Cotton
Return Air Filter	G4+G3 Composite Filter	G4+G3 Composite Filter	G4+G3 Composite Filter
Supply Air Filter	G4+G3 Composite Filter, H13 Silver Ion Composite Filter	G4+G3 Composite Filter, H13 Silver Ion Composite Filter	G4+G3 Composite Filter, H13 Silver Ion Composite Filter
Filtration Efficiency [PM2.5]	99%	99%	99%
Duct Flange Size [mm]	ϕ150	ϕ150	ϕ150
Weight [Kg]	29	35	49
Total Heat Exchange Efficiency	72%	73%	75%
Heat Exchanger Core Type	Counterflow Full Heat Washable Heat Exchange	Counterflow Full Heat Washable Heat Exchange	Counterflow Full Heat Washable Heat Exchange
Heat Exchanger Core Material	Polymer Membrane	Polymer Membrane	Polymer Membrane

Komfort GLA D250(F)

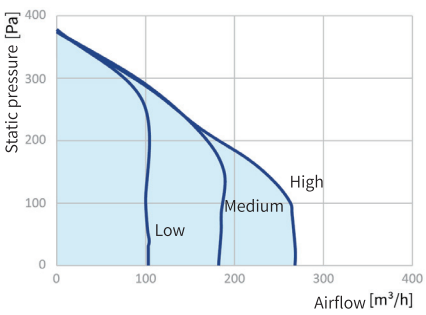

Komfort GLA D350(F)

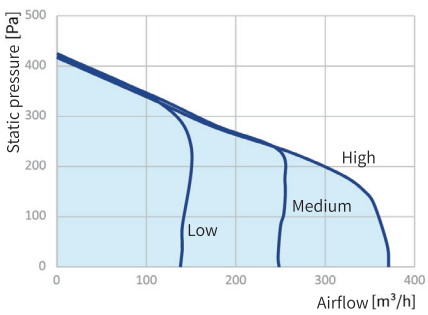

Komfort GLA D500(F)

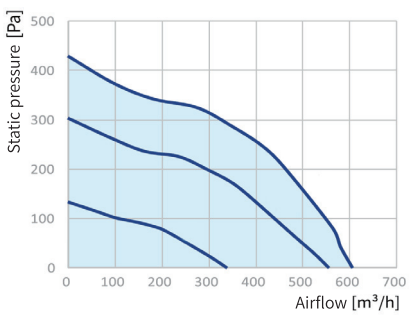

KOMFORT GRE EC

Commercial Space ERV

Features

- The fresh air unit is suitable for the fresh air systems of low-energy buildings, providing efficient heat recovery.
- It is a controllable mechanical energy-saving ventilation system.
- It has a heat recovery function, minimizing heat loss during the ventilation process.
- It balances humidity and regulates the exchange of indoor and outdoor air, creating a separately controllable microenvironment.

Airflow:
Up to 5000 m^3/h

Heat Recovery Efficiency:
Up to 72 %

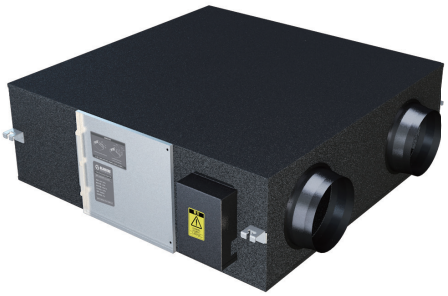

Design

- The unit adopts a sheet metal structure, with insulation materials applied both inside and outside, providing excellent thermal insulation and sound absorption performance.
- Mounting brackets with vibration-damping connectors are integrated into the casing for easy installation.
- For models with airflow below 1000 m^3/h, round flanges are installed at the air inlet and outlet to facilitate connection with duct systems.
- Removable access panels allow for easy internal cleaning, filter replacement, and routine maintenance.

Fan

- High-efficiency EC fan.
- Provides strong power with low energy consumption, achieving maximum energy savings and ventilation efficiency.
- The EC fan operates smoothly, with low noise and stepless speed regulation. (EC fan series) The fan undergoes dynamic balance correction for stable and smooth operation.

KOMFORT GRE EC500-1000

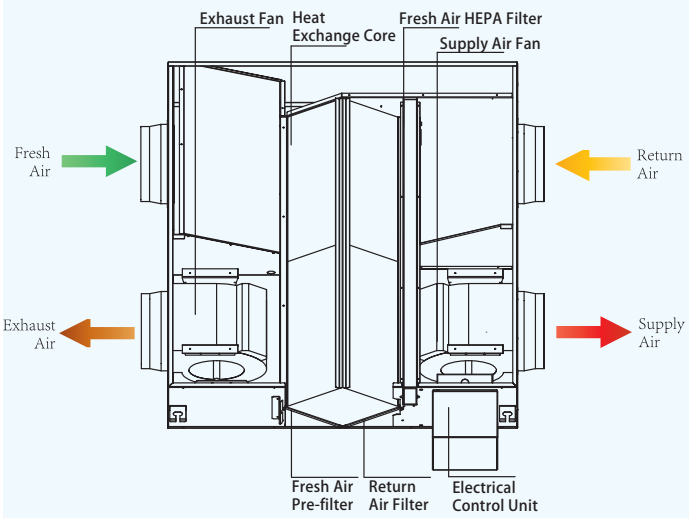

KOMFORT GRE EC1500-5000

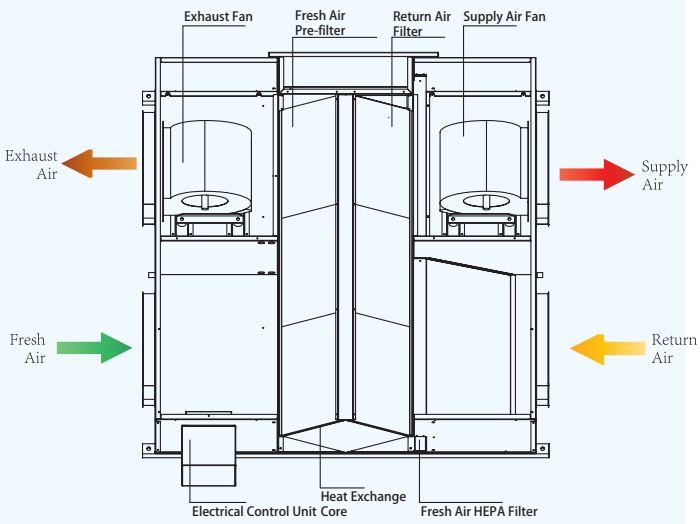

Heat Recovery

- The equipment is equipped with a high-efficiency membrane structure heat exchange core that is washable. The sensible heat recovery efficiency is no less than 75%, and the total heat recovery efficiency is no less than 70%. It effectively recovers the thermal energy from the indoor exhaust air, reducing the heating or cooling load of the incoming fresh air, thus achieving energy conservation and environmental protection. The temperature of the fresh air supply is more comfortable.
- This series of fresh air devices meets the requirements for heat exchange efficiency in low-energy buildings.

Fresh Air Electric Preheating

- The electric preheating box is installed externally on the fresh air intake duct, and it can be selected based on the usage environment.
- For cold or severe cold areas with low outdoor temperatures in winter, it is recommended to configure the corresponding electric preheating box when selecting this series of fresh air units.

Filters

- The fresh air unit is equipped with a G4 initial efficiency filter and a high-efficiency H13 filter, providing dual purification. The PM2.5 filtration efficiency reaches up to 99%.

Control and Automation

- The control system of this equipment includes one intelligent controller CS3N and one five-in-one environmental sensor AQT-4.
- CS3N Controller:
  - Power on/off the device.
  - Set and control the speed of the supply and exhaust fans.
  - Device operation modes: Smart mode (based on indoor CO2 and PM2.5), Fresh air mode, By-pass mode.
  - Indoor and outdoor enthalpy difference control for by-pass mode operation, which can be automatic or manual.
  - Filter replacement reminder.
  - Control of the electric shut-off damper on the supply air and exhaust air ducts (with reserved ports).
  - Control of the supply air preheating box on the fresh air duct.
- AQT-4 Sensor:
  - A five-in-one sensor that includes temperature and humidity, PM2.5, TVOC, and CO2 sensors.



Installation

- Install using fixed brackets on the ceiling.
- When installing the product, ensure proper condensation drainage and that the inspection panel is easily accessible for maintenance.
- Filter maintenance and cleaning inspection port location: side inspection.

Naming Rule

Series	Motor Type	Installation Method	Heating Type	Nominal Airflow [m³/h]	Electric Preheating Power [kW]	Maintenance Method
KOMFORT	EC	D: Ceiling-mounted, flange in horizontal direction	E:Supply Air Electric Preheating	500~5000	1.5~13	Side maintenance

Dimensions

Model	L	W	H	A	B	C	D	E	F	G	J	K	M
KOMFORT GRE EC 500/800	1140	1130	390	1070	1310	285	578	285	578	245	1185	1340	195
KOMFORT GRE EC 1000	1140	1375	390	1070	1310	385	680	285	680	245	1430	1585	195

Komfort GRE EC500/800-1000

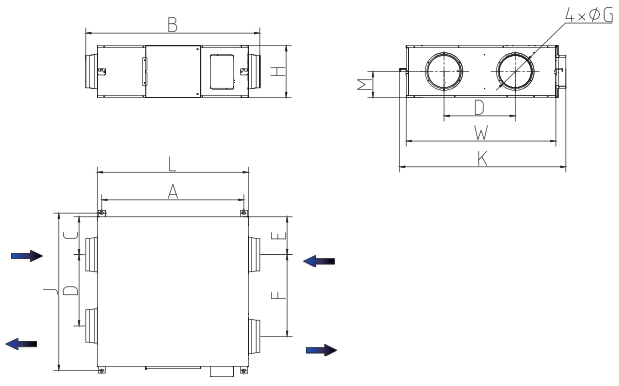

Komfort GRE EC1500-5000

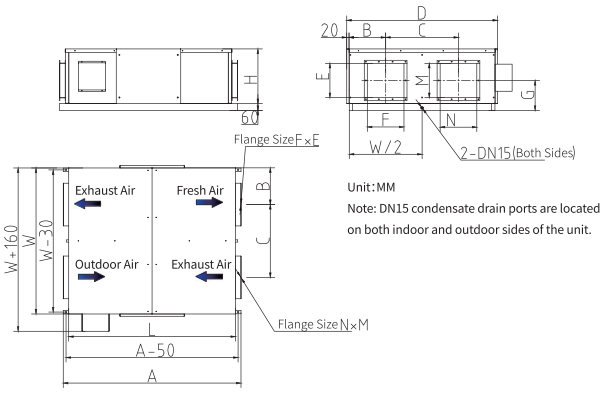

Unit:MM

Note: DN15 condensate drain ports are located on both indoor and outdoor sides of the unit.

Model	L	W	H	A	B	C	D	E	F	G	M	N
KOMFORT GRE EC 1500	1450	1270	540	1550	318	635	1450	300	320	260	300	320
KOMFORT GRE EC 2000	1495	1470	580	1595	368	735	1650	300	320	260	300	320
KOMFORT GRE EC 2500	1495	1470	580	1595	368	735	1650	300	320	260	300	320
KOMFORT GRE EC 3000	1625	1470	665	1725	368	735	1650	275	435	270	420	500
KOMFORT GRE EC 4000	1785	1470	665	1885	368	735	1650	275	435	360	420	500
KOMFORT GRE EC 5000	1785	1470	1090	1885	368	735	1650	395	434	580	690	585

Technical Parameters

Parameters	EC500 L/R	EC800 L/R	EC1000 L/R	EC1500 L/R	EC2000 L/R	EC2500 L/R	EC3000 L/R	EC4000 L/R	EC5000 L/R
Rated Power Supply	220V~50Hz							380V-50Hz	
Rated Supply Air Volume [m^3/h]	500	800	1000	1500	2000	2500	3000	4000	5000
External Static Pressure of Supply Fan [Pa]	100	120	120	160	180	210	250	250	280
Rated Exhaust Air Volume [m^3/h]	500	800	1000	1500	2000	2500	3000	4000	5000
External Static Pressure of Exhaust Fan [Pa]	100	100	100	160	180	200	200	200	200
Rated Power [W]	250	355	440	675	890	1120	1325	1800	2245
Electric Preheating Power [W]	1.5	1.5	2.5	4.5	5.8	7	8	10.8	13
Total Heat Exchange Efficiency [%]	70.1	70.3	70.5	70.4	70.8	71.5	71.3	71.6	72
Noise Level [dBA]	41	46	48	52	55	57	59	62	65
Casing Material	Galvanized Steel Plate								
Insulation Material	NBRRubber and Plastic								
Return Air Filter	G4								
Supply Air Filter	G4+H11								
Filtration Efficiency [PM2.5]	99.5%								
Weight [Kg]	74	74	84	172	190	194	218	275	335

Note:
1.All products in this series are equipped with fresh air bypass function as standard.
2.The product comes with the AQT-4 environmental sensor, which can display environmental parameters (such as temperature, humidity, CO2, PM2.5, TVOC, etc.), and can intelligently control the fresh air volume based on CO2 and PM2.5 levels.

KOMFORT GRE AC

Commercial Space ERV

Features

- The fresh air unit is suitable for the fresh air systems of low-energy buildings, providing efficient heat recovery.
- It is a controllable mechanical energy-saving ventilation system.
- It has a heat recovery function, minimizing heat loss during the ventilation process.
- It balances humidity and regulates the exchange of indoor and outdoor air, creating a separately controllable microenvironment.

Airflow:
Up to 4000 m^3/h

Heat Recovery Efficiency:
Up to 61.3 %

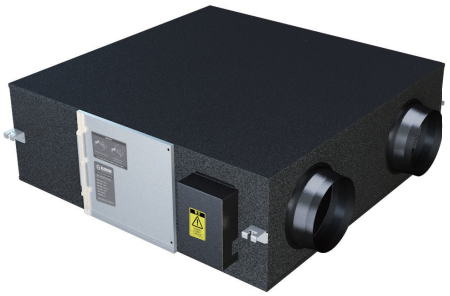

Design

- Constructed with galvanized sheet metal and externally lined with foam for effective thermal insulation and noise reduction.
- Equipped with a total heat exchange core made of high-performance membrane material, offering excellent energy recovery efficiency while improving indoor comfort.
- Modular design with full side access for maintenance — all components are serviceable from the side, eliminating the need for large access panels and simplifying upkeep.

Fan

- High-performance AC fan.
- Dual-inlet, forward-curved centrifugal fan provides powerful airflow at lower rotational speeds.
- Stable AC motor operation with low noise output.
- Dynamically balanced fan for smooth and quiet performance.

KOMFORT GRE AC 1000

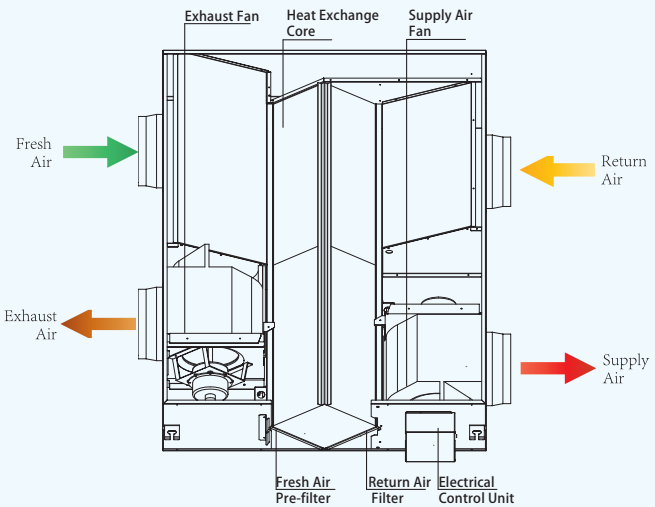

KOMFORT GRE AC 1500-5000

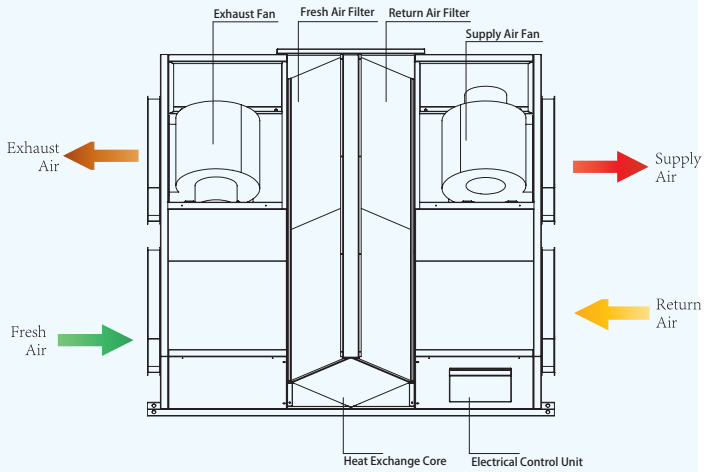

Heat Recovery

- Utilizes a counterflow-type total heat exchange core made of advanced polymer membrane.
- All models achieve a total heat exchange efficiency of over 60%, delivering outstanding energy-saving performance.
- Effectively recovers both temperature and humidity, ensuring a comfortable indoor environment.
- Note: The product is designed for total heat recovery. However, under extreme weather conditions, condensation may still occur. To prevent any issues related to condensate, a drainage outlet is reserved in the unit and must be connected to a drainpipe during installation.(This note is usually displayed in a smaller red font.)

Filters

- The unit comes standard with F5 filters on both the fresh air and return air sides.
- If a higher level of fresh air filtration is required, the fresh air filter can be optionally upgraded to an H11 filter.

Control & Automation

- GRE 1000 is equipped with the S42 LCD controller as standard.
  - Power on/off control.
  - Three-speed fan control.
- Indoor Temperature & Humidity Display
  - Filter Replacement Reminder
  - Standard 485 Communication Protocol
- GRE 1500/2000/3000/4000/5000 Control Features
  - Equipped with S43 keyboard switch as standard.
  - 380V power supply.
  - Power on/off function.





Installation

- Install using the mounting brackets on the ceiling.
- During installation, the KOMFORT GRE AC1500/2000/3000/4000/5000 units must account for condensate drainage, with both condensate drainage outlets requiring connection to pipes.
- Sufficient space must be provided at the installation location to allow for future maintenance and servicing.

Naming Rule

Series	Motor Type	Installation Method	Nominal Airflow [m³/h]	Maintenance Method
KOMFORT	AC	D: Ceiling-mounted, flange in horizontal direction	1000~5000	Side maintenance

Dimensions

Model	L	W	H	A	B	C	D	E	F	G	J	K	M
KOMFORT GRE AC 1000	1140	1375	390	1070	1310	305	670	385	765	245	1430	1500	195

Komfort GRE AC 1000

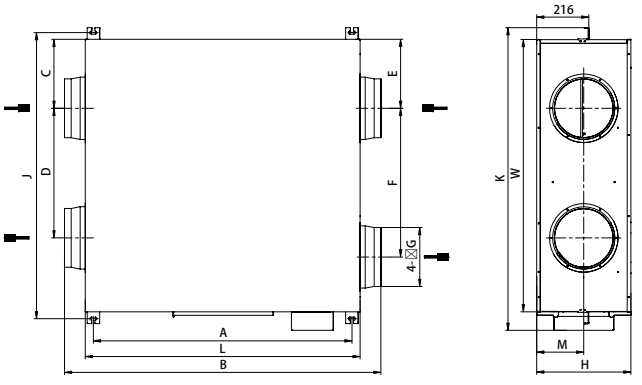

Komfort GRE AC1500-3000

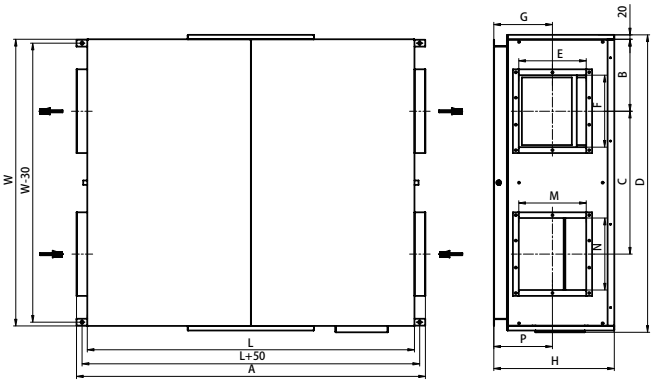

Model	L	W	H	A	B	C	D	E	F	G	M	N	P
KOMFORT GRE AC 1500	1450	1270	540	1550	318	635	1320	300	320	260	300	320	260
KOMFORT GRE AC 2000	1495	1470	580	1595	368	735	1520	300	320	260	300	320	260
KOMFORT GRE AC 3000	1625	1470	655	1725	368	735	1520	275	365	325	420	500	330

Model	L	W	H	A	B	C	D	E	F	G	M	N
KOMFORT GRE AC 4000	1625	1470	655	1725	388	735	1520	275	365	325	420	500

Komfort GRE AC 4000

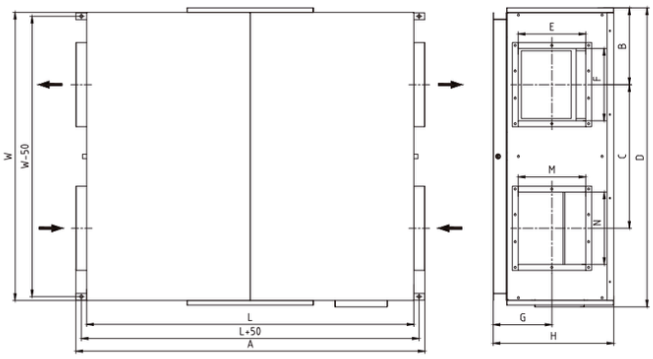

Technical Specifications

Parameters	KOMFORT GRE AC1000	KOMFORT GRE AC1500	KOMFORT GRE AC2000	KOMFORT GRE AC3000	KOMFORT GRE AC4000
Rated Power Supply	220V~50Hz	380V~50Hz			
Rated Supply Air Volume [m^3/h]	1000	1500	2000	3000	4000
External Static Pressure of Supply Fan [Pa]	130	160	160	220	250
Rated Exhaust Air Volume [m^3/h]	1000	1500	2000	3000	4000
External Static Pressure of Exhaust Fan [Pa]	130	150	160	220	250
Rated Power [W]	530	1260	1210	2350	4985
Total Heat Exchange Efficiency [%]	60.2	61.3	60.5	60.4	59.20
Noise Level [dBA]	45	52	57	62	65
Casing Material	Galvanized Sheet + External Sponge				
Insulation Material	NBR Rubber				
Return Air Filter	F5				
Supply Air Filter	F5 (Optional: H11)				
Weight [Kg]	82	168	192	205	230
Control Cable Specifications	5*0.75mm^2	2*1mm^2	2*1mm^2	2*1.5mm^2	
Power Cable Specifications	3*1mm^2	5*1mm^2	5*1mm^2	5*1.5mm^2	5*2.5mm^2

KOMFORT D6B

Efficient ERV



Features

- The fresh air ventilator is suitable for air supply and exhaust systems in apartments, houses, and small villas.
- It features heat recovery function, which minimizes heat loss during ventilation.
- It is suitable for low-energy home fresh air systems.
- The flange size is Ø146mm.

Airflow:
Up to 350m³/h

Heat Recovery Efficiency:
Up to 81 %

Design

- Constructed with galvanized sheet metal and internally insulated with 5-20 mm insulation material for excellent thermal insulation and noise reduction.
- The unit features a removable panel for easy maintenance and filter replacement.
- Equipped with ABS flanges at both ends of the supply fan for easy installation with various types of duct systems.
- The casing is fitted with mounting brackets for ceiling installation.

Fan

- High-efficiency DC internal rotor fan.
- Provides strong power with low energy consumption and high fan efficiency.
- Low noise operation, infinite speed control, and excellent start-up and speed regulation characteristics.
- Dynamically balanced fan for stable and smooth operation.

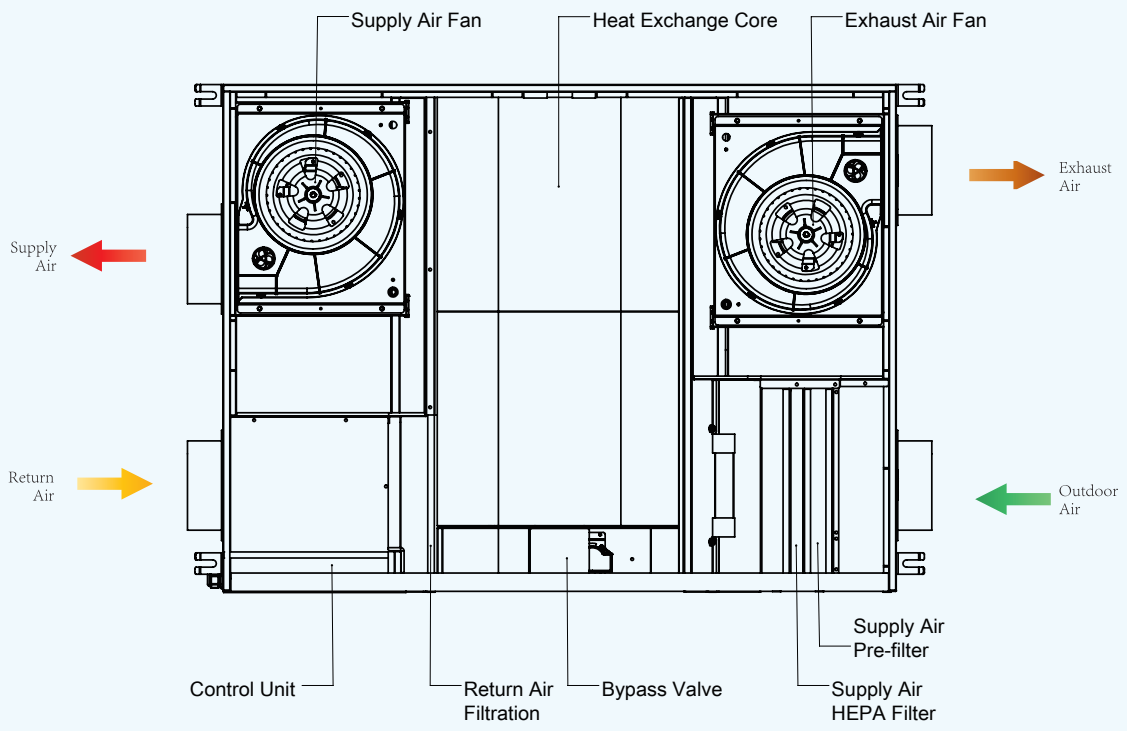

Heat Exchange



- Crossflow total heat exchanger with a washable total heat exchange core that has antibacterial properties.
- The heat exchange process is based on the heat transfer effect that occurs within the heat exchanger core when warm, humid air exchanges energy between the supply and exhaust airflow.
- In winter, the heat exchanger core absorbs heat from the warm exhaust air and preheats the incoming fresh air, reducing heat loss from indoor air during the cold season.In summer, the process is reversed—the energy exchange between indoor and outdoor air allows the heat exchanger core to retain the coolness of the indoor air, optimizing the ventilation function of the air conditioning system and reducing its load.

Anti-Frost Defrosting Protection

- The electronic anti-frost system prevents the heat exchanger core from freezing during cold seasons. When the system detects a freezing risk via temperature sensors, the supply air fan automatically shuts down, allowing the heat exchanger core to be heated by the warm exhaust air. Once the frost is eliminated, the fan resumes normal operation.

Filters

- G4+F7 panel filter at the fresh air inlet for effective filtration.
- G4 primary filter at the return air inlet.

Control and Automation

- The control system of this equipment includes one intelligent controller CS3N and one five-in-one environmental sensor AQT-4.
- The CS3N Controller can monitor real-time indoor temperature, humidity, PM2.5, CO concentration, and TVOC concentration. It is equipped with an odBuSRTU (RS485) interface, allowing users to connect to smart terminals (such as smart home systems) via the ModBus interface. In smart mode, the controller can adjust the operating airflow of the fresh air fan based on the indoor PM2.5 and CO concentration levels.
- CS3N Features:
  - Power On/Off.
  - Set and control the fan speed of both the supply air fan and exhaust air fan.
  - Select the operation mode of the fresh air fan: Smart, Fresh air, or Bypass.
  - Filter Replacement Reminder.
  - Indoor/Outdoor enthalpy difference control, with supply air bypass function.
  - Control electric sealing dampers on the supply air and exhaust air ducts (control ports reserved).
  - Automatically control the electric preheater for supply air based on temperature signals.
  - RS485 protocol, compatible with integration into a smart control system.



Installation

- Due to its ultra-thin body, the unit is very suitable for ceiling installation in houses with limited space.
- The installation location must provide sufficient space for future maintenance and servicing.

Naming Rule

Series	Heat Exchange Core Type	Motor Type	Installation Method	Airflow [m³/h]
KOMFORT D6B	ERV	DC:DC fan	Ceiling-mounted, flange in horizontal direction	150;250;350

Dimensions

Model	A	B	C
Komfort D6B 150	530	615	700
Komfort D6B 250	530	615	700
Komfort D6B 350	655	765	850

Dimensions [inch]

Model	L	L1	L2	W	H	W1	W2	W3	W4	W5	W6	W7
Komfort D6B 150	1100	1134	263	700	250	615	327	530	285	105	95	140
Komfort D6B 250	1100	1134	263	700	250	615	327	530	285	105	95	140
Komfort D6B 350	1100	1134	263	850	250	765	327	655	285	105	95	140

Komfort D6B L Left

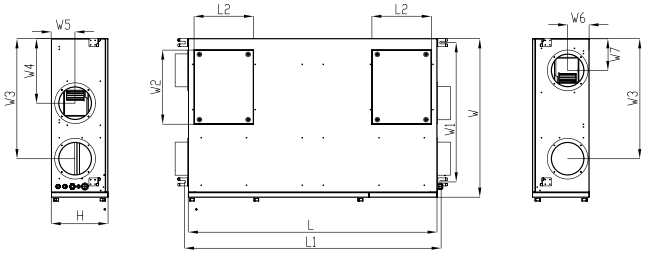

Komfort D6B R Right

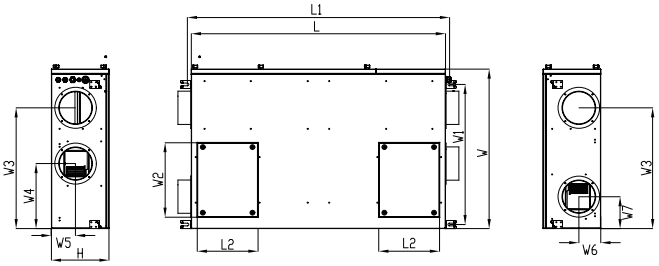

Technical Specifications

Parameters	Komfort D6B 150	Komfort D6B 250	Komfort D6B 350
Rated Supply Air Volume [m³/h]	150	250	350
Rated Exhaust Air Volume [m³/h]	135	230	320
Fan Type	DC	DC	DC
Rated Power Supply	220V~50Hz	220V~50Hz	220V~50Hz
Operating Current [A]	0.21	0.43	0.52
Rated power [W]	45	95	116
Electric preheating power [W]	1000	1000	1000
Supply Air Filter	G4 Composite Filter, F7 Silver Ion Composite Filter	G4 Composite Filter, F7 Silver Ion Composite Filter	G4 Composite Filter, F7 Silver Ion Composite Filter
Return Air Filter	G4 Composite Filter	G4 Composite Filter	G4 Composite Filter
Heat Exchange Core Type	Counterflow Total Heat Exchanger, Washable	Counterflow Total Heat Exchanger, Washable	Counterflow Total Heat Exchanger, Washable
Heat Exchange Core Material	Polymer Membrane	Polymer Membrane	Polymer Membrane
Net Weight of Product [Kg]	42	42	49
Heating Sensible Heat Exchange Efficiency [%]	85	79	75
Heating Total Heat Exchange Efficiency [%]	81	77	74
Casing Material	Hot-dip Galvanized Steel Plate	Hot-dip Galvanized Steel Plate	Hot-dip Galvanized Steel Plate
Insulation Layer Thickness [mm]	20	20	20
Flange Diameter [mm]	ϕ146	ϕ146	ϕ146
Installation Method	Ceiling-mounted	Ceiling-mounted	Ceiling-mounted
Maintenance Method	Side/Bottom Maintenance	Side/Bottom Maintenance	Side/Bottom Maintenance

Komfort D6B 250

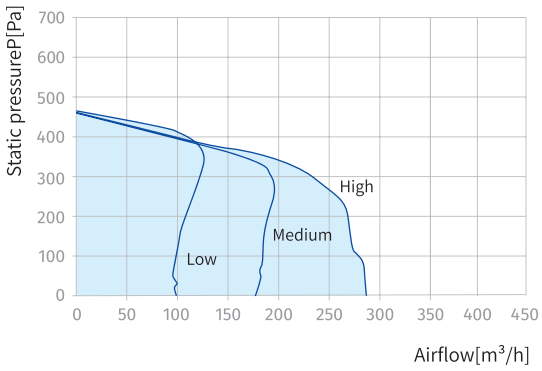

Komfort D6B 350

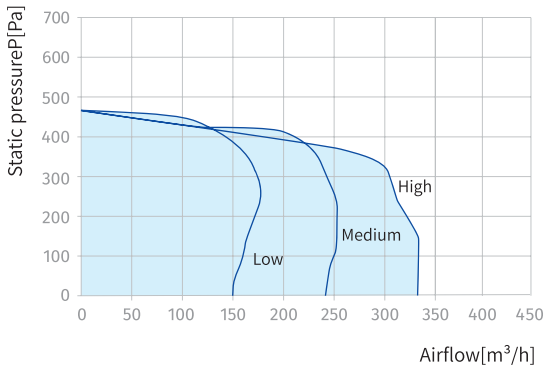

ISO BOX-F

Single-directional flow fresh air ventilator

Application

- Suitable for various applications, including apartments, hotels, restaurants, hospitals, basements and office buildings;
- Designed for supply with HEAP filter and high noise reduction requirements.
- Flange diameter range:110mm to 200mm.

Maximum Airflow: 500 m^3/h

Minimum Power Consumption: 60 W

Noise Level: 32 dB(A)

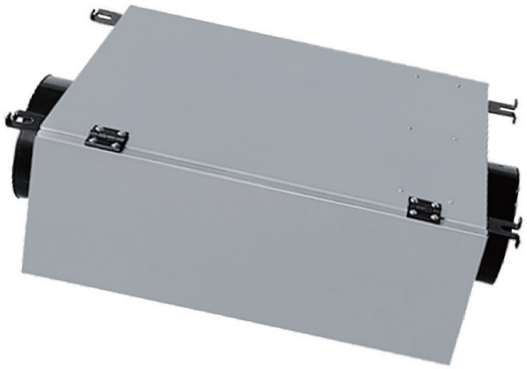

Features

- It features a sheet metal outer casing with an internal insulation design, which not only provides effective heat insulation but also reduces noise.
- The door-latch access panel allows maintenance without auxiliary tools, making upkeep more convenient and user-friendly.
- It is equipped with a G4+H12 filter and a dual-speed controller.
- With a thickness of no more than 250mm, it doesn’ t take up excessive indoor clear height, freeing up more living space.

Motor

- The AC centrifugal fan adopts a large-impeller design. With its low rotation speed, it operates at low noise—creating a quiet home environment.

Installation

- Can be installed at any position within the duct system.
- Can be fixed to walls or ceilings using brackets.
- Can be connected to ducts via flanges and clamps.

Control

- The device comes standard with a dual-speed controller.
- It controls the device's on/off, as well as high and low speeds.



Naming Rules				
Model	**Flange Diameter**	**C**	**1**	**2**
ISO BOX-F	110; 150; 200;	Made in China	1:AC fan; 2:DC fan;	2:Dual-speed control; 3:Three-speed control;

Dimensions

Model	L	L1	L2	W	W1	H	D
ISO BOX - F 150 - C12	470	515	568	365	270	200	110
ISO BOX - F 250 - C12	515	560	613	415	320	220	150
ISO BOX - F 350 - C12	515	560	613	415	320	240	150
ISO BOX - F 500 - C12	550	595	648	465	350	250	200

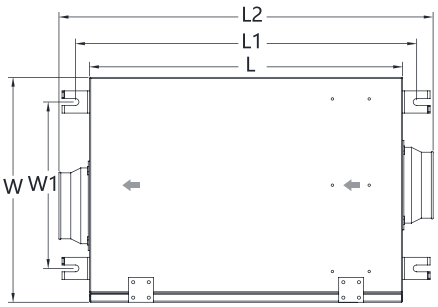

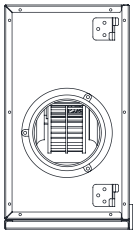



Technical Specifications

Parameter	ISO BOX-F 150-C12	ISO BOX-F 250-C12	ISO BOX-F 350-C12	ISO BOX-F 500-C12
Power Supply [V/Hz]	230/50	230/50	230/50	230/50
Rated Airflow [m^3/h]	150	250	350	500
Static Pressure [Pa]	90	100	110	120
Power Consumption [W]	60	75	110	135
Current [A]	0.26	0.33	0.48	0.59
Noise Level [dBA] 3m	33	33	35	38

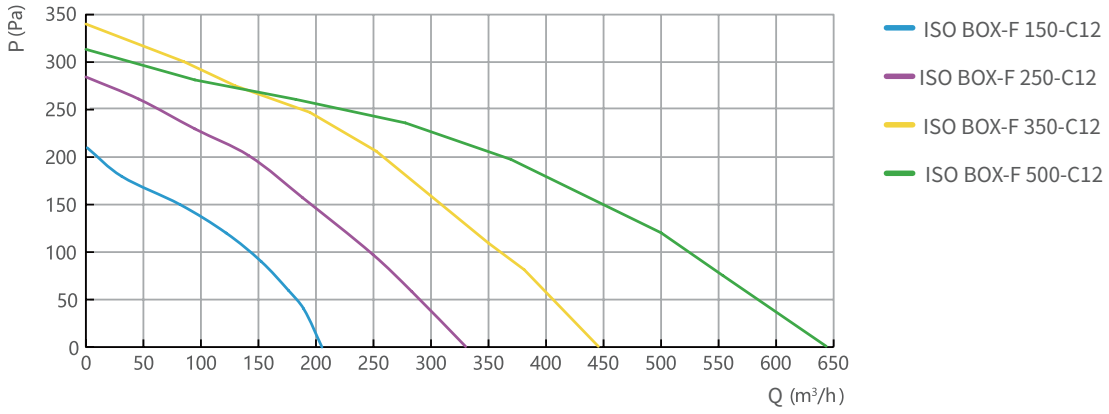

BLAUAIR CFP

CEILING MOUNTED HEAT RECOVERY UNITS



Features

- High-efficient EC fans, backward_x0002_ curved, external rotor. Integrated plug-and-play controls.
- Automatic full-size bypass. ECO-Design'18 compliant. Polystyrene plate heat exchanger.
- Panel filters ePM1 55%.
- Removable service doors..
- Web interface, MODBUS, outputs for optional DX or Hydronic cooling/ heating..
- Operation by RH/CO2/temperature/constant pressure/timer schedule.
- For the internal structure, some components adopt a 304 stainless steel structure, which is corrosion-resistant.

Airflow:
Up to 3500m^3/h

Heat Recovery Efficiency:
Up to 90 %

Dimensions [mm]

Model	L	W	H	Connection
Blauair CFP 900	1349	1351	318	254
Blauair CFP 1500	1646	1500	480	600*350
Blauair CFP 2500	1646	1500	480	600*350
Blauair CFP 3500	1880	1500	480	600*350

BLAUAIR CFP 900

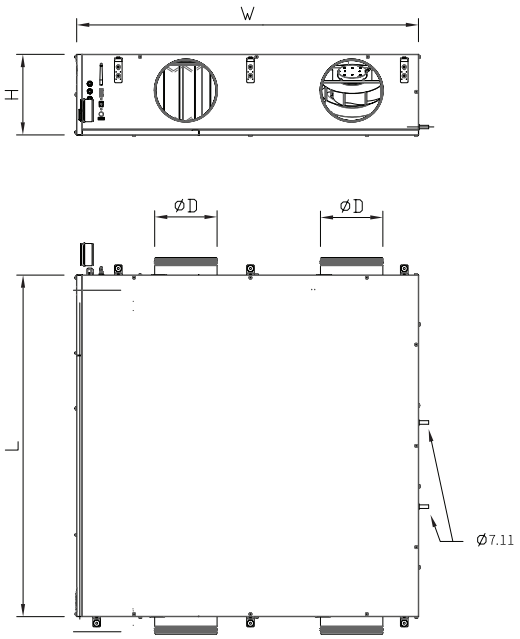

BLAUAIR CFP 1500-3500

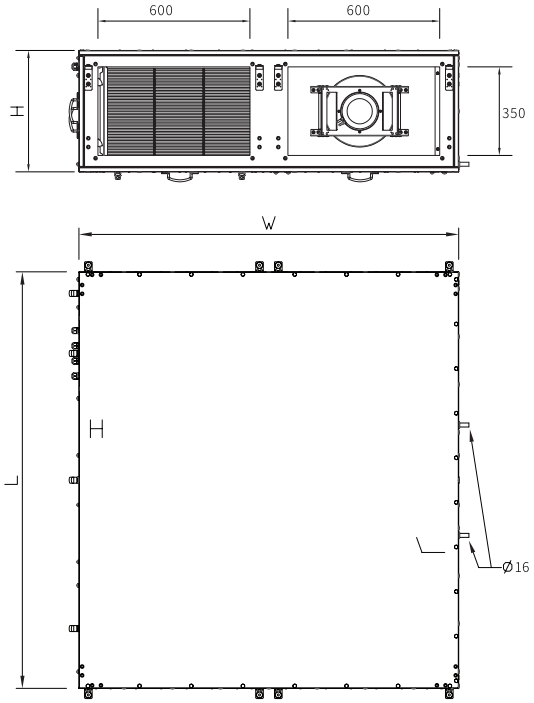

Technical Specifications

Parameters	Blauair CFP 900	Blauair CFP 1500	Blauair CFP 2500	Blauair CFP 3500
Power Supply [V/PH]	220/1	220/1	220/1	380/3
Max Unit Power Without electric Heater [W]	442	920	1480	2240
Intergratd Electric Heater [kW]	3.3	N/A	N/A	N/A
Operating Termperature [°C]/[°F]	-20°C ~ 40°C(-4~104）	-20°C ~ 40°C(-4~104)	-20°C ~ 40°C(-4~104)	-20°C ~ 40°C(-4~104)
Case Material	Aluzinc + Powder Coating	Aluzinc + Powder Coating	Aluzinc + Powder Coating	Aluzinc + Powder Coating
Pannel	Double Skin	Double Skin	Double Skin	Double Skin
Insulation	20mm Mineral Wool	40mm Mineral Wool	40mm Mineral Wool	40mm Mineral Wool
Anti Corrosion Class	C5	C5	C5	C5
By-pass Damper	Integrated	Integrated	Integrated	Integrated
Extract Filter	G4	G4	G4	G4
Supply Filter	G4(F7 Option)	G4(F7 Option)	G4(F7 Option)	G4(F7 Option)
Connection size [mm]	254	600*350	600*350	600*350
Weight [Kg]	111	215	220	290
Heat recovery Efficiency [%]	Up to 90%	Up to 90%	Up to 90%	Up to 90%
Heat exchanger Type	Conterflow Non Permeable	Conterflow Non Permeable	Conterflow Non Permeable	Conterflow Non Permeable

DEHUMIDIFIER

CONTENTS

- MERENFORT DOF 27
- *MERENFORT DTF* 29
- *MERENFORT KUG* 32
- *DUNE* 46

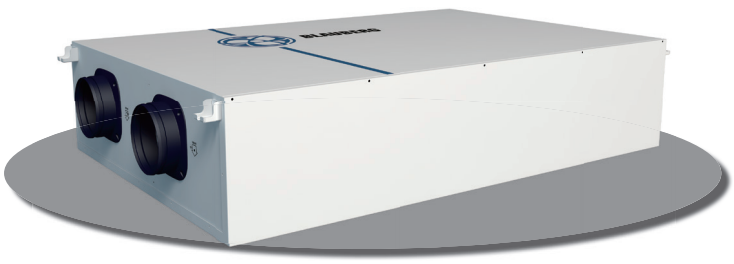

MERENFORT DOF

Residential Unidirectional Flow Fresh Air Dehumidifier



Features

- Suitable for high-humidity areas such as villa basements, underground parking lots, etc., and can also be used as a ventilation device.
- Multiple dehumidification modes with good humidity control, and the ability to introduce fresh air.
- Flange size: 150mm.

Design

- Constructed with galvanized sheet metal and internally insulated with EPP (Expanded Polypropylene) for excellent thermal insulation and noise reduction.
- The unit is equipped with a removable panel on the side for easy maintenance and filter replacement.
- Flanges are installed at both ends of the supply air dehumidifier for easy connection to ducts.
- The casing features mounting brackets for ceiling installation.
- Electric dampers are installed at both the outdoor air inlet and return air inlet, allowing for a variety of operation modes.
- The return air inlet is equipped with a five-in-one sensor, while the outdoor air inlet has a temperature and humidity sensor for intelligent monitoring.
- RS485 interface is provided as standard, with mobile app control for convenience.

Compressor

- Uses a high-efficiency piston compressor, energy-saving and quiet.
- The compressor is fixed with a cushioning system, effectively reducing vibration transmission.

Fan

- Uses a DC forward-tilted volute fan.
- Constant air volume, optimized internal duct structure, low noise.
- Fan dynamic and static balance calibration for smoother operation.

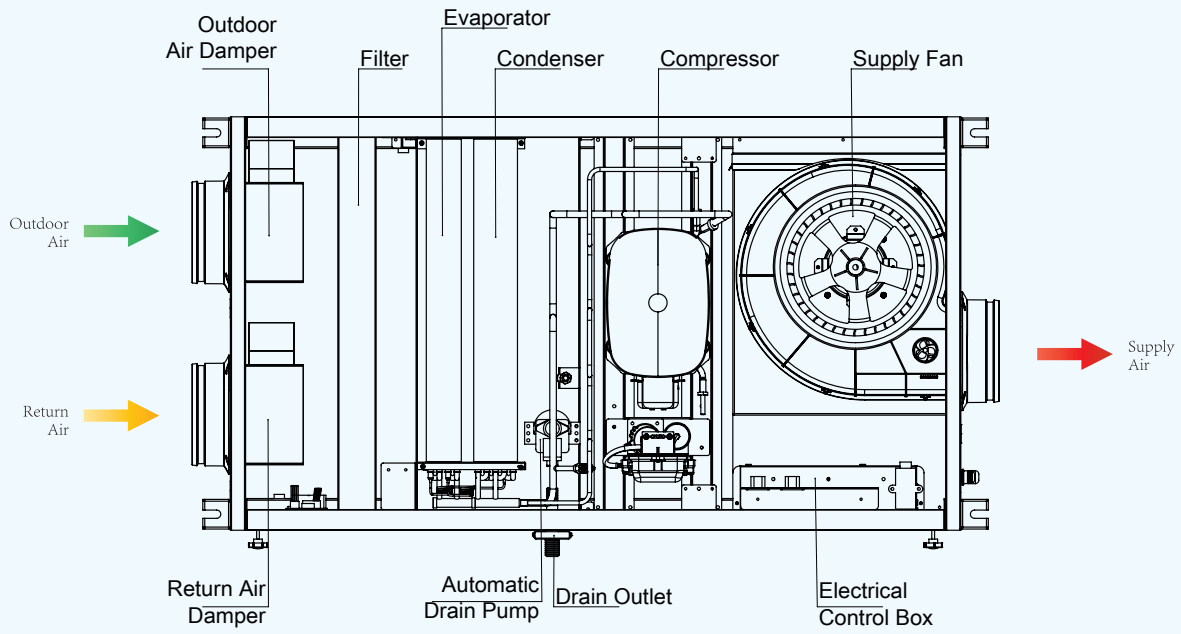

Air Dehumidification Process

- High-temperature and high-humidity air from the outdoor air and return air inlets enters the unit. It first passes through the evaporator, where it is cooled to below the dew point temperature, causing moisture to condense and be removed from the air. The resulting low-temperature, low-humidity air then passes through the condenser, where it is reheated and transformed into high-temperature, dry air, which is then supplied to the indoor space.

Filter

- The air inlet is equipped with a G3+H11 composite filter, providing a PM2.5 filtration efficiency of over 97%.
- At the same time, it protects the compressor and the evaporator-condenser, preventing internal blockage.

Control & Automation

Merenfort DOF Dehumidifier Dedicated Controller:



- Device power switch
- Operation mode switching (Smart Mode, Fresh Air Ventilation, Fresh Air Dehumidification, Powerful Dehumidification, Rapid Purification Mode)
- Dehumidification function switch
- Humidity setting (20-95%)
- Air volume adjustment (High, Medium, Low, Auto)
- Indoor air quality monitoring (Temperature & Humidity, TVOC, PM2.5, CO2)
- RS485 interface, MODBUS RTU protocol, compatible with BMS systems
- Mobile App function for remote monitoring and control

Installation

- Due to its ultra-thin body, the unit is ideal for ceiling installation in houses with limited space.
- The installation location must provide sufficient space for future maintenance and servicing.
- Proper drainage for condensate must be considered.

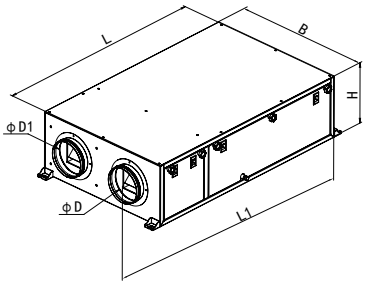

Dimensions

Model	D	D1	B	H	L	L1
MERNFORT DOF 38L/350-AR-2.0	150	150	525	256	932	1042
MERNFORT DOF 70L/500-AR-2.0	150	150	625	268	1062	1172

Technical Parameters

Parameters		MERNFORT DOF 38L/350-AR-2.0	MERNFORT DOF 70L/500-AR-2.0
Rated Voltage [V]		220~	220~
Rated Frequency [Hz]		50	50
Rated Power / Maximum Power [W]		390/610	740/1150
Dehumidification Capacity	30/80[L/D]	38	70
	27/60[L/D]	20	40
Rated Airflow [m^3/h]		High/Medium/Low:350/280/210	High/Medium/Low:500/400/300
Fresh Air Intake Capacity [m^3/h]		0-350	0-500
External Static Pressure [Pa]		150	150
Noise Level [dB (A)]		36	42
Applicable Area [m^2]		50-75	75-140
Filtration Level		Silver Ion+HEPA	Silver Ion+HEPA
Refrigerant/Charge Amount [g]		R290/200	R290/300
Weight [kg]		43	58
Air Duct Flange Size [mm]		ϕ150*3	ϕ150*3

Notes:

1.The input power, dehumidification capacity, noise level, and airflow data are all tested under dehumidification mode.

2.The airflow, input power, and dehumidification capacity data are measured with 1m air ducts connected to both the air inlet and outlet of the unit, under 0Pa static pressure.

3.The noise level is an A-weighted average sound pressure level, with a central value from laboratory tests and a tolerance range of ±3dB.

4.The noise level is measured in a noise testing room at a distance of 1.5m below the product, with a 1m silencer pipe connected to the air outlet and a 1m air duct connected to the air inlet.

5.The dehumidification operating temperature refers to the inlet air temperature range within which the compressor can start and operate, without affecting fan operation.

MERNFORT DOF 38L/350-AR-2.0

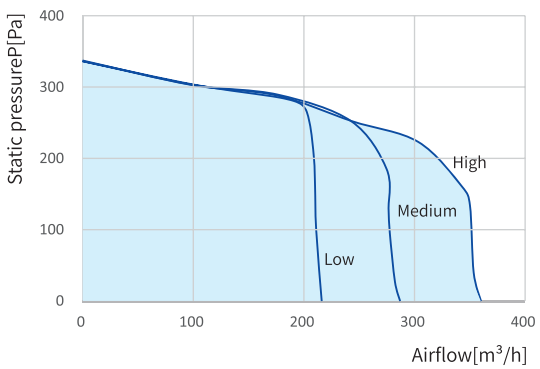

MERNFORT DOF 70L/500-AR-2.0

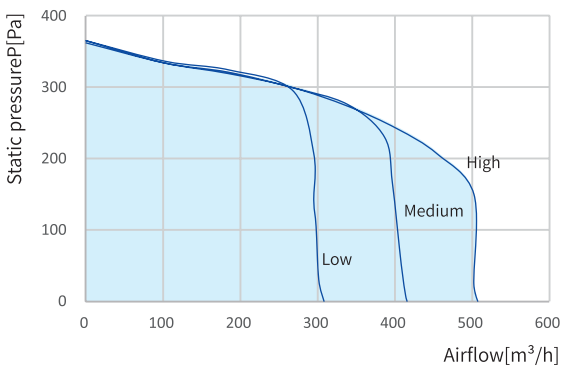

MERENFORT DTF

Residential ERV With Dehumidifier



Features

- Suitable for environments that require efficient dehumidification while needing fresh air ventilation with heat exchange functionality.
- Fresh air dehumidification, where outdoor fresh air is dehumidified and supplied into the room; also supports internal circulation for rapid and powerful dehumidification.
- Isothermal dehumidification, without increasing the energy consumption of air conditioning.
- Flange size is 150mm.

Design

- Constructed with polymer-coated sheet metal and internally insulated with EPP for effective thermal insulation and noise reduction.
- Equipped with removable side panels for easy maintenance and filter replacement.
- Flanges are installed at both ends of the ERV with dehumidifier for convenient duct connection.
- Mounting brackets are integrated into the casing for ceiling installation.
- A five-in-one sensor is installed at the return air inlet, and a temperature & humidity sensor is installed at the outdoor air inlet for intelligent monitoring.
- RS485 interface is provided as standard.
- The dehumidification, heat exchange core, and fan modules are designed independently, allowing for easier maintenance and servicing.

Compressor

- Uses a high-efficiency piston compressor, energy-saving and quiet.
- The compressor is fixed with a cushioning system, effectively reducing vibration transmission.

Fan

- Uses a DC forward-tilted volute fan.
- Constant air volume, optimized internal duct structure, low noise.
- Fan dynamic and static balance calibration for smoother operation.

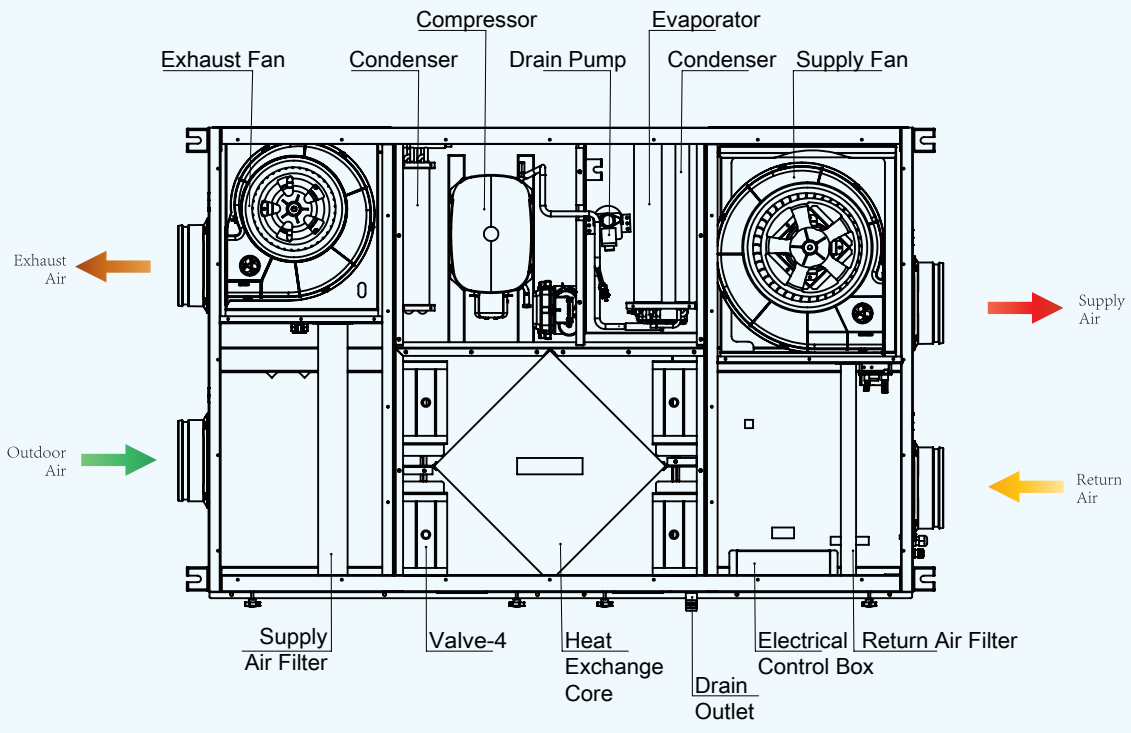

Isothermal Dehumidification Process

- Fresh Air Dehumidification Mode: High-temperature, high-humidity air enters the unit through the outdoor air inlet. It first passes through the evaporator, where it is cooled below the dew point, causing moisture to condense and be removed. The resulting low-temperature, low-humidity air then passes through part of the condenser for preheating. Afterward, it flows through the heat exchange core, where it exchanges heat with the indoor exhaust air. The final air delivered indoors is low-humidity air at a temperature close to the indoor temperature.
- Powerful Dehumidification Mode: High-temperature, high-humidity air enters through the indoor return air inlet. It is cooled by the evaporator to below the dew point, allowing moisture to condense and be removed, becoming low-temperature, low-humidity air. This air is then reheated by the condenser to reach a temperature close to the indoor environment and is supplied back indoors as dry, room-temperature air. Meanwhile, outdoor air is drawn in through the outdoor air inlet, and a motorized damper controls the airflow to discharge excess heat, generated by the compressor and another part of the condenser, through the exhaust air outlet.

Filter

- Built-in silver ion combined with H10 composite filter at air inlet; silver ion plus G4 filter on return air outlet and air intake surface. It prevents dust accumulation on heat exchangers and avoids reduced heat exchange efficiency.

Control & Automation

Merenfort DTF Dehumidifier Dedicated Controller:



- Device power switch
- Operation mode switching (Smart Mode, Fresh Air Ventilation, Fresh Air Dehumidification, Powerful Dehumidification, Rapid Purification Mode)
- Dehumidification function switch
- Humidity setting (20-95%)
- Air volume adjustment (High, Medium, Low, Auto)
- Indoor air quality monitoring (Temperature & Humidity, TVOC, PM2.5, CO2)
- RS485 interface, MODBUS RTU protocol, compatible with BMS systems
- Mobile App function for remote monitoring and control

Installation

- Due to its ultra-thin body, the unit is ideal for ceiling installation in houses with limited space.
- The installation location must provide sufficient space for future maintenance and servicing.
- Proper drainage for condensate must be considered.

Dimensions

Model	D	B	H	L	L1
MERNFORT DTF38L/350-ARI-2.0	150	875	292	1292	1330
MERNFORT DTF70L/450-ARI-2.0	150	875	292	1292	1330

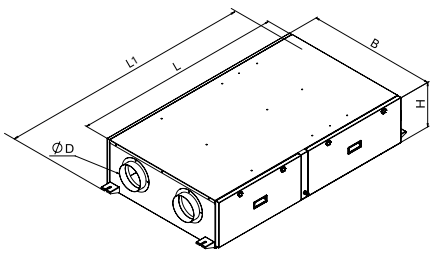

Technical Parameters

Parameters		MERNFORT DTF38L/350-ARI-2.0	MERNFORT DTF70L/450-ARI-2.0
Rated Voltage [V]		220~	220~
Rated Frequency [Hz]		50	50
Rated Input Power [W]		390	840
Weight [kg]		92	100
Dehumidification Capacity	30/80[L/D]	38	70
	27/60[L/D]	19	38
Total Heat Exchange Efficiency	Cooling Recovery [%]	55	55
	Heating Recovery [%]	60	60
Rated Airflow	Supply Air Volume [m^3/h]	High/Medium/Low：350/280/210	High/Medium/Low：450/360/300
	Return Air Volume [m^3/h]	High/Medium/Low：300/230/160	High/Medium/Low：400/310/250
Available Outdoor Air Intake [m^3/h]		0-350	0-450
External Static Pressure [Pa]		150	150
Noise [dB (A)]		38	43
Applicable Area [m^2]		50-75	75-140
Filtration Level	Supply Air	Silver Ion+HEPA	Silver Ion+HEPA
	Return Air	Silver Ion+G4	Silver Ion+G4
Refrigerant / Charge Amount [g]		R290/200	R290/300
Dehumidification Operating Temperature [°C]		5-38	5-38
Flange Size [mm]		ϕ150*4	ϕ150*4

Notes:

1.The input power, dehumidification capacity, noise level, and airflow data are all tested under dehumidification mode.

2.The airflow, input power, and dehumidification capacity data are measured with 1m air ducts connected to both the air inlet and outlet of the unit, under 0Pa static pressure.

3.The noise level is an A-weighted average sound pressure level, with a central value from laboratory tests and a tolerance range of ±3dB.

4.The noise level is measured in a noise testing room at a distance of 1.5m below the product, with a 1m silencer pipe connected to the air outlet and a 1m air duct connected to the air inlet.

5.The dehumidification operating temperature refers to the inlet air temperature range within which the compressor can start and operate, without affecting fan operation.

MERNFORT DTF 38L/350-ARI-2.0

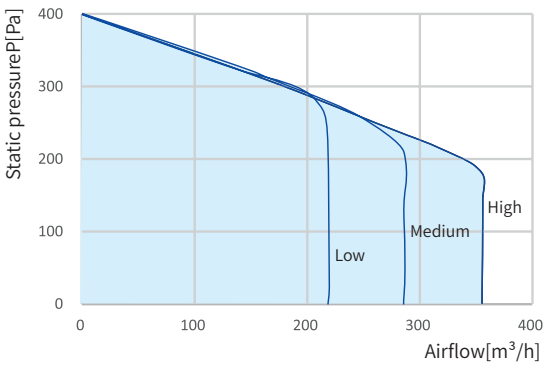

MERNFORT DTF 70L/450-ARI-2.0

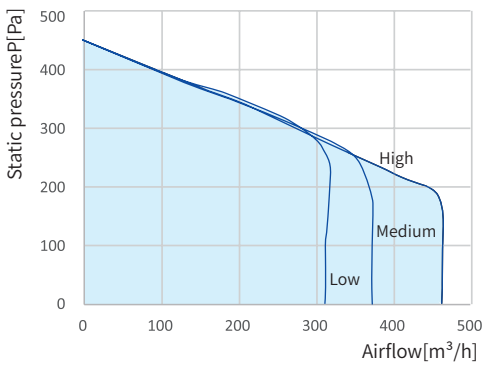

MERENFORT KUG

All-in-One Air Handling Unit



Features

- Suitable for areas with high dehumidification demands, integrating ventilation, dehumidification, and temperature regulation functions.
- Offers multiple modes such as isothermal dehumidification, heating dehumidification, and cooling dehumidification to meet different climate and control requirements throughout the year.
- Comprehensive functions including ventilation, purification, dehumidification, optional humidification, and temperature control.
- Delivers full-function integrated air treatment.

Design

- The exterior uses a powder-coated sheet metal process, making it resistant to corrosion and deformation. The internal structure is lined with sound-absorbing cotton to reduce noise.
- A maintenance panel is reserved on the side for easy access, with a small opening size.
- The internal layout is optimized to meet the needs of high airflow and high pressure while maintaining extremely low noise levels.
- Equipped with a standard RS485 interface.
- The return air port is equipped with a five-in-one sensor with an extension cable, installed in the return air duct to avoid inaccurate data caused by outdoor air and return air mixing inside the unit. A separate temperature and humidity sensor is also installed at the outdoor air inlet.

Compressor

- Branded compressor with excellent quality and long-lasting durability;
- Split-type installation reduces indoor noise and allows for enhanced dehumidification capacity.

Fan

- Dual-inlet impeller combined with specially designed blades ensures high airflow and pressure with low noise;
- DC motor for high efficiency and energy saving.

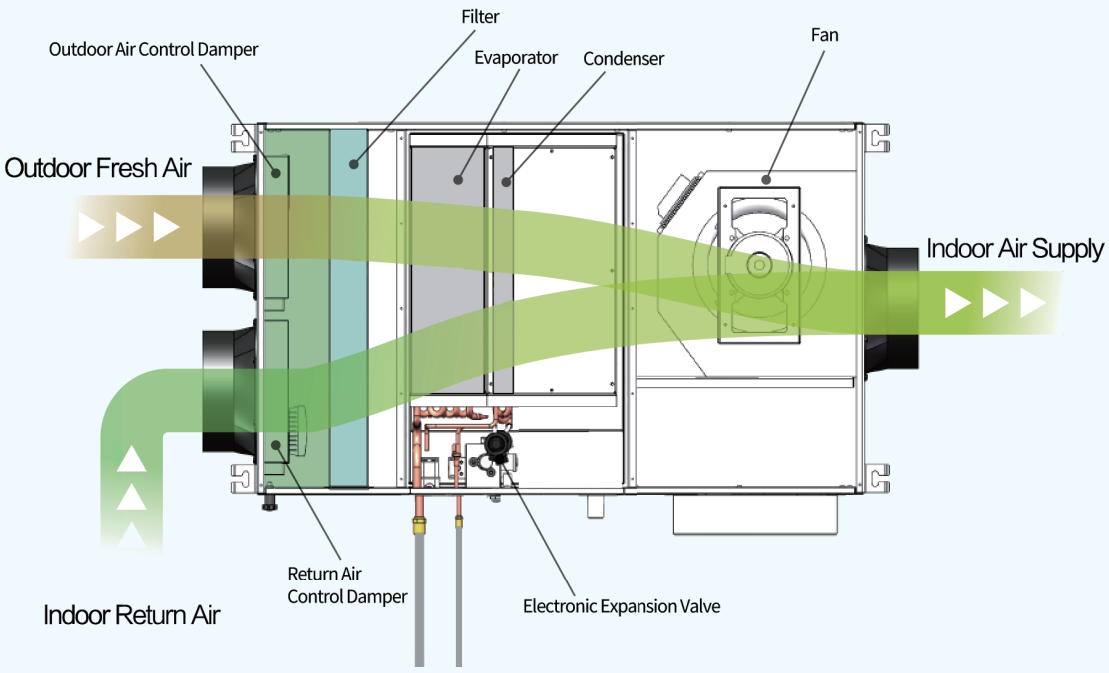

Filter

- The air inlet is equipped with a high-efficiency composite filter (G4+H10) to prevent dust accumulation on the heat exchanger and ensure optimal heat exchange performance.

Control and Automation



- The controller offers four operation modes:
  - Fresh Mode: During the humid seasons like "Hui Nan Tian" (post-rain humidity) and the plum rain season, this mode focuses on dehumidification and temperature control, delivering a refreshing breeze while avoiding overly cold airflow that may cause discomfort. In summer, it assists with cooling by adjusting based on indoor temperature changes, saving energy while maintaining the dew point of the airflow to prevent condensation in ventilation ducts. The system automatically adjusts fresh air intake based on indoor air quality, with powerful dehumidification to ensure outdoor air doesn' t disrupt indoor comfort.
  - Gentle Warm Mode: In winter, it preheats incoming air to avoid cold drafts from outdoor air. An optional humidity module can be added, using pure water evaporation to provide gentle, moist airflow, keeping indoor air fresh and comfortably humid.
  - Ultra-Dry Mode: Activated when indoor humidity is excessively high, it rapidly increases internal airflow circulation for fast dehumidification.
  - Ventilation Mode: Used during transitional seasons when indoor-outdoor temperature and humidity differences are minimal. It only introduces fresh, filtered air without activating the compressor—no dehumidification, humidification, cooling, or heating.
- Wall-mounted LCD control panel with touch button operation
- Standard 86-type mounting box
- Airflow control (high, medium, low)
- Indoor air quality monitoring with RS485 configuration

Installation

- The unit should be installed away from noise-sensitive areas, such as bedrooms and study rooms.
- For ceiling-mounted installation, consider the structure of the slab and ensure sufficient strength to avoid noise caused by vibrations. The unit should not be installed directly against the slab. It is recommended to install it in an open or integrated ceiling for convenient maintenance.
- The unit must be installed level. The drainage pipe outlet should include a vent hole, and the condensate pipe should have a slope of at least 1% to ensure proper drainage during operation.
- Use rigid U-PVC or galvanized pipes; flexible hoses are not allowed.

Dimensions

Model	A	B	C	D	E	F	G	H
MERENFORT KUG D300 2P-1.0	1000	600	300	1045	550	1178	89	66
MERENFORT KUG D500 2P-1.0								
MERENFORT KUG D500 3P-1.0								

MERENFORT KUG INDOOR UNIT

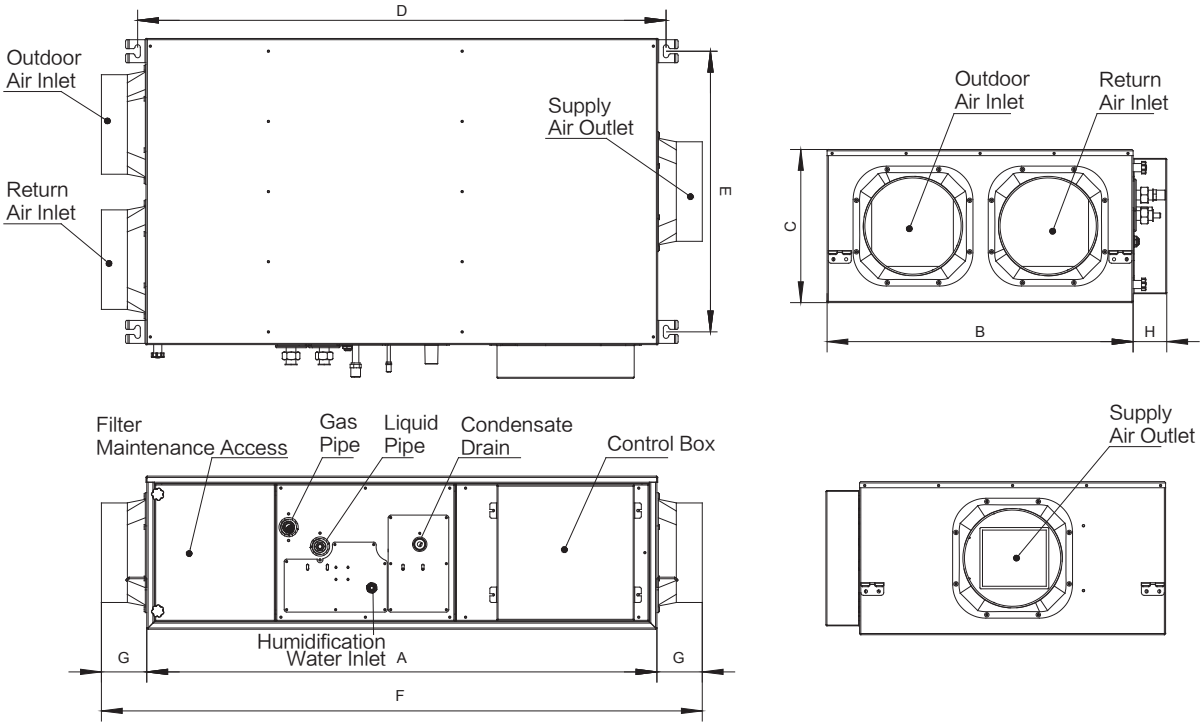

Model	A	B	C	D	E	F	G
MERENFORT KUG D300 2P-1.0(Outdoor unit)	765	555	290	350	543.4	325.7	55.3
MERENFORT KUG D500 2P-1.0(Outdoor unit)							
MERENFORT KUG D500 3P-1.0(Outdoor unit)	925	795	365	430	628	382.5	64.4

MERENFORT KUG OUTDOOR UNIT

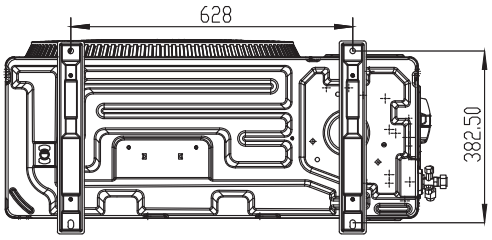

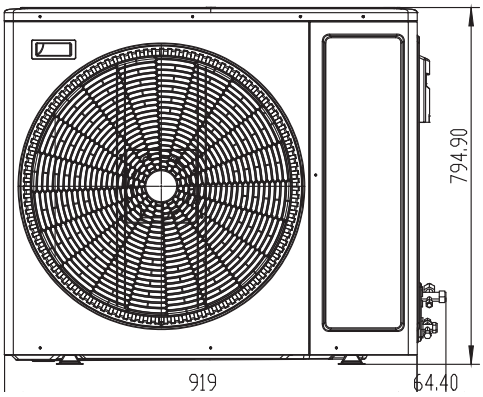

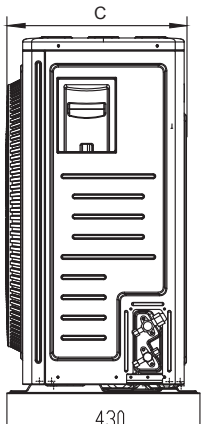

Technical Specifications

Indoor Unit Model		MERENFORT KUG D300 2P-1.0	MERENFORT KUG D500 2P-1.0	MERENFORT KUG D500 3P-1.0
Rated Airflow [m³/h]		300	500	500
External Static Pressure [Pa]		200		
Noise Level [dB(A)]		36	39	37
Dehumidification Capacity	30/80 [L/D]	105	135	211
	27/60 [L/D]	55	75	92
Humidification Capacity (Optional) [Kg/h]		1.75	2.2	2.2
Rated Power Supply		220V~50Hz		
Rated Power [W]		120	145	180
Expansion Method		Electronic Expansion Valve		
Air Filter		G4+H10		
Outdoor/Return Air Flange [mm]		D160	D160	D200
Supply Air Flange [mm]		D160	D200	D200
Unit Dimensions [L*W*H]		1178*600*300mm		
Weight [Kg]		42	45	45

Outdoor Unit Model	MERENFORT KUG D300 2P-1.0(Outdoor Unit)	MERENFORT KUG D500 2P-1.0 (Outdoor Unit)	MERENFORT KUG D500 3P-1.0 (Outdoor Unit)
Rated Cooling Capacity [W]	5200	5200	7500
Rated Heating Capacity [W]	5800	5800	8000
Rated Power Supply	220V~50Hz		
Rated Power [W]	1820	1820	2150
Refrigerant Type	R410a		
Refrigerant Charge [Kg]	1.5	1.5	2.2
Noise Level [dB(A)]	53	53	55
Weight [Kg]	35	35	58
Unit Dimensions [L*W*H]	795*290*555mm	795*290*555mm	925*365*795mm

注:测试工况:
室外工况:35°C/65%RH
室内工况:26°C, 50%RH
*可根据需求选配内置加湿器模块。
由于产品设计会定期改善,部分产品参数与本用户手册会存在轻微差异。

MERENFORT KUG D300 2P-1.0

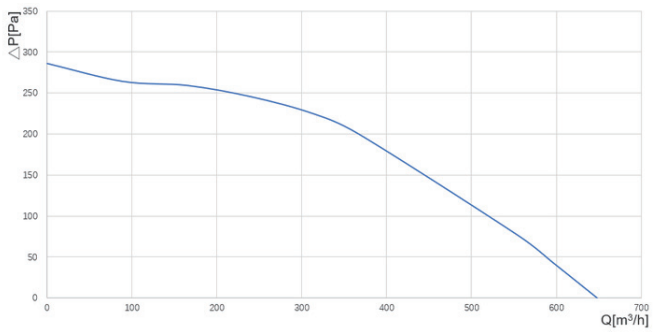

MERENFORT KUG D500 2P-1.0

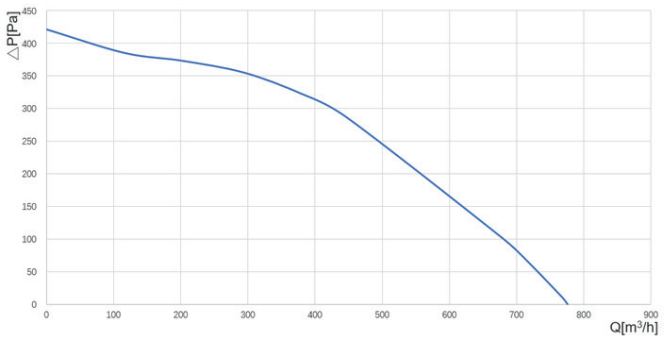

DUNE

Residential Ceiling-mounted Dehumidifier



Features

- The dehumidifier is suitable for high-humidity areas such as villa basements and underground parking lots.
- Internal circulation dehumidification, preventing the introduction of external humid air for better humidity control.
- Flange size: 146mm.

Design

- Made of galvanized sheet metal with built-in thermal and acoustic insulation, providing both heat preservation and noise reduction.
- The side of the unit is equipped with a removable panel for easy maintenance and filter cleaning or replacement.
- Flanges are installed on both ends of the dehumidifier.
- The sheet metal structure includes mounting brackets for ceiling installation.

Compressor

- Depending on the model, either a piston-type or rotary-type compressor is used.
- Compact compressor with low energy consumption and low noise.
- Buffer-mounted to effectively reduce vibration transmission.

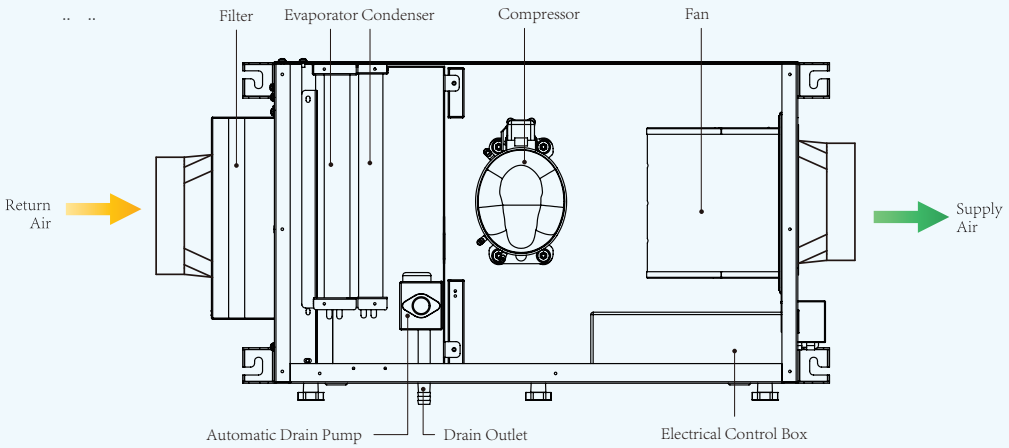

Isothermal Dehumidification Process

- The first process is that the fan sucks the humid air from the indoor space into the machine.
- The second process is that the humid air sucked in passes through the evaporator (cooling copper tubes and fins), where it is liquefied into water droplets and then drained out through the hose.
- The third process is that the dried air, after being cooled by the evaporator, passes through the condenser (high-temperature copper tubes and fins) where it is heated and then sent into the room through the air outlet.
- This process cycles multiple times, thereby reducing the indoor air humidity.

Filter

- The air inlet is equipped with a coarse filter to filter out large particles, protecting the compressor, evaporator, and condenser from dust accumulation.

Control and Automation

Dune series dedicated controller:

- Device On/Off
- Operation mode switching (Dehumidification, Ventilation)
- Humidity setting (20-95%)
- Airflow control (High, Low)
- Timer function



Installation

- Due to the ultra-thin design of the device, it is ideal for ceiling installation in spaces with limited room.
- The installation location must provide enough space for future maintenance and servicing.
- Condensate drainage must be considered during installation.

Dimensions

Model	D/D1	B	H	L	L1
Dune 20L	146	351	201	646	865
Dune 50L	146	472	240	778	1000
Dune 90L	146	721	310	803	1067

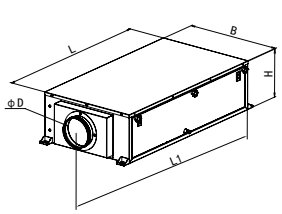

DUNE 20L/50L

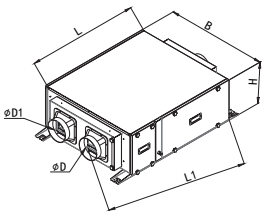

DUNE 90L

Technical Parameters

Parameters	Dune 20L	Dune 50L	Dune 90L
Applicable Area [m²]	25-40	40-100	100-160
Maximum Static Pressure [Pa]	150	370	450
Rated Voltage [V]	220~		
Rated Frequency [Hz]	50		
Dehumidification Capacity [L/D] (30°C/80%)	20	50	90
Air Flow [m³/h]	200	450	700
Rated Power [W]	400	1150	1350
Noise [dB (A)]	38	45	47
Shell Material	Polymer Coated Steel Plate		
Refrigerant/Charging Amount [g]	R134a/260	R134a/900	R410A/900
Supply Air Filter	G2		
Air Outlet Flange [mm]	ϕ146		
Weight [kg]	28	47	65

Notes:

1.The input power, dehumidification capacity, noise level, airflow, and other data are all tested under dehumidification mode.

2.Airflow, input power, dehumidification capacity, and other data are measured with 1-meter ducts connected to both the intake and exhaust openings, with a static pressure of 50 Pa.

3.The noise level is the A-weighted average sound pressure level, which is the central value of laboratory test results with a tolerance range of ±3 dB.

4.The noise level is measured at a distance of 1.5 meters below the product in a soundproof test room (with a 1-meter soundproof duct connected to the outlet and a 1-meter duct connected to the intake).

5.The airflow is the average value of the company's test results, with a tolerance range of ±10%.

Dune 25L

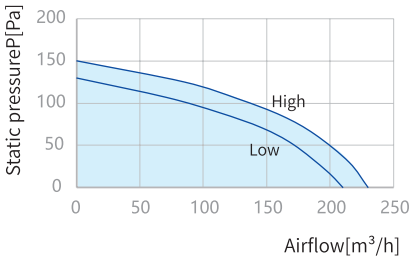

Dune 50L

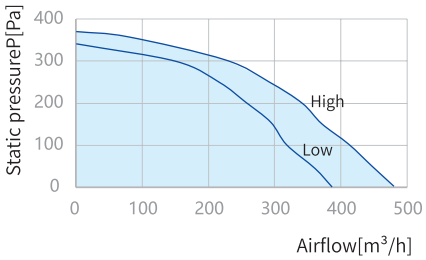

Dune 90L

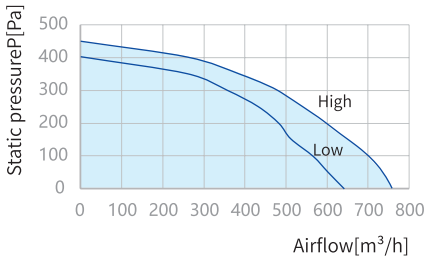

HUMIDIFIER

CONTENTS

MERENFORT HUD 40



MERENFORT HUD

Humidifier

Features

- Adopting a rotating wheel design, it comes with a built-in formaldehyde removal function and features regular internal self-cleaning and sewage discharge.
- No water mist — complete evaporation.No white powder, no white fog.
- No water quality requirements — tap water is applicable.
- No consumables required.

Humidification capacity: 1700ml/h

Applicable Area: 60㎡



Design

- As the rotating wheel spins, it thoroughly breaks down water droplets into water molecules that disperse into the air. The multi-layered aluminum foil mesh structure significantly enhances humidification efficiency, and the precisely sized mesh holes achieve a scale-free effect as water passes through.

Control and Automation



- Power On/Off Key: Turns the device on or off.
- Mode Switch Key:
  - In standby mode (power off), press and hold for 5 seconds to activate the parameter setting menu.
  - In operating mode (power on), switches between different operating modes.
- Fan Speed Selection Key: Adjusts and selects the operating fan speed when the device is on.
- Humidity Increase Key:
  - In operating mode: Increases the preset humidity level.
  - In standby mode: Increases the configured parameter value.
- Humidity Decrease Key:
  - In operating mode: Decreases the preset humidity level.
  - In standby mode: Decreases the configured parameter value.
- Modus RS485

Dimensions

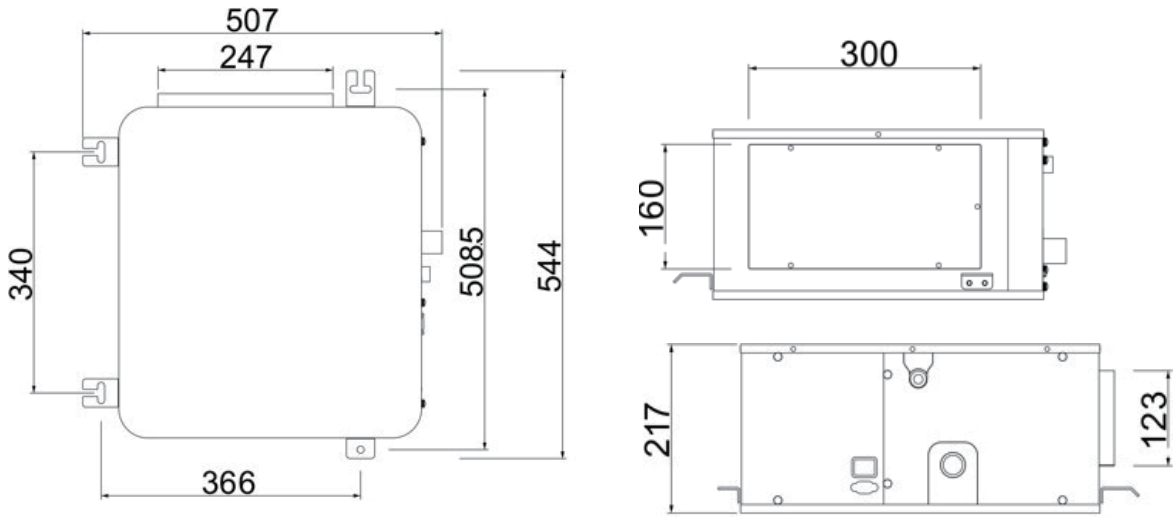

Technical Specifications

Specifications	MERENFORT HUD 1700
Rated Voltage [V/Hz]	220
Rated Power [W]	45
Air Volume [m^3/h]	300
Humidification Capacity [ml/h]	1700
Air Outlet Dimensio [mm]	247*123
Noise Level [dB(A)]	34

Operating Conditions:
Air Inlet Temperature: 10°C ~ 40°C
Ambient Temperature: Not lower than 10°C
Water Supply Temperature: 10°C ~ 40°C
Water Quality Requirement: Use municipal tap water that complies with the national standard GB5749-2006. Do not use water from unknown sources.

INTEGRATED HEAT PUMP ENVIRONMENT CONTROL UNIT WITH OUTDOOR AIR

CONTENTS

KOMFORT ICEW 49



KOMFORT ICEW



Features

- Specifically designed for passive low-energy buildings, it features high-efficiency cooling and heating, efficient filtration, fresh air regulation, and high-efficiency heat recovery. It integrates multiple functions such as total heat exchange fresh air ventilation, air purification, cooling and heating, air quality monitoring, and energy consumption management into one system, with a variety of flexible control strategy combinations.
- Suitable for low-energy buildings, such as apartments, houses, villas, etc.

Design

- The double-layer sheet metal body combined with EPP and rubber insulation materials ensures quiet operation and eliminates cold bridges.
- The fresh air inlet uses a 195mm flange to ensure sufficient fresh air volume.
- The return air and indoor circulation air interfaces are located on both sides of the unit, suitable for various installation environments.
- Multiple wind speed sensors are set at different points (fresh air, exhaust air, supply air, and bypass air ducts) to monitor airflow in real-time.
- Condensate water drainage is positioned on the positive pressure side to avoid the installation of water traps and prevent foul smells from being drawn in when the system is off.
- High-efficiency inverter compressor, R410a environmentally friendly refrigerant.
- The outdoor unit uses an EVI (enhanced vapor injection) compressor, which can start and run normally at -25°C.

Fan

- Unique three-fan structure.
- Both the supply air fan and fresh air fan use dual-inlet forward EC fans, while the exhaust fan uses a single-inlet forward EC fan.
- Highly efficient, low power consumption, and low noise, ensuring the highest energy-saving and ventilation efficiency.

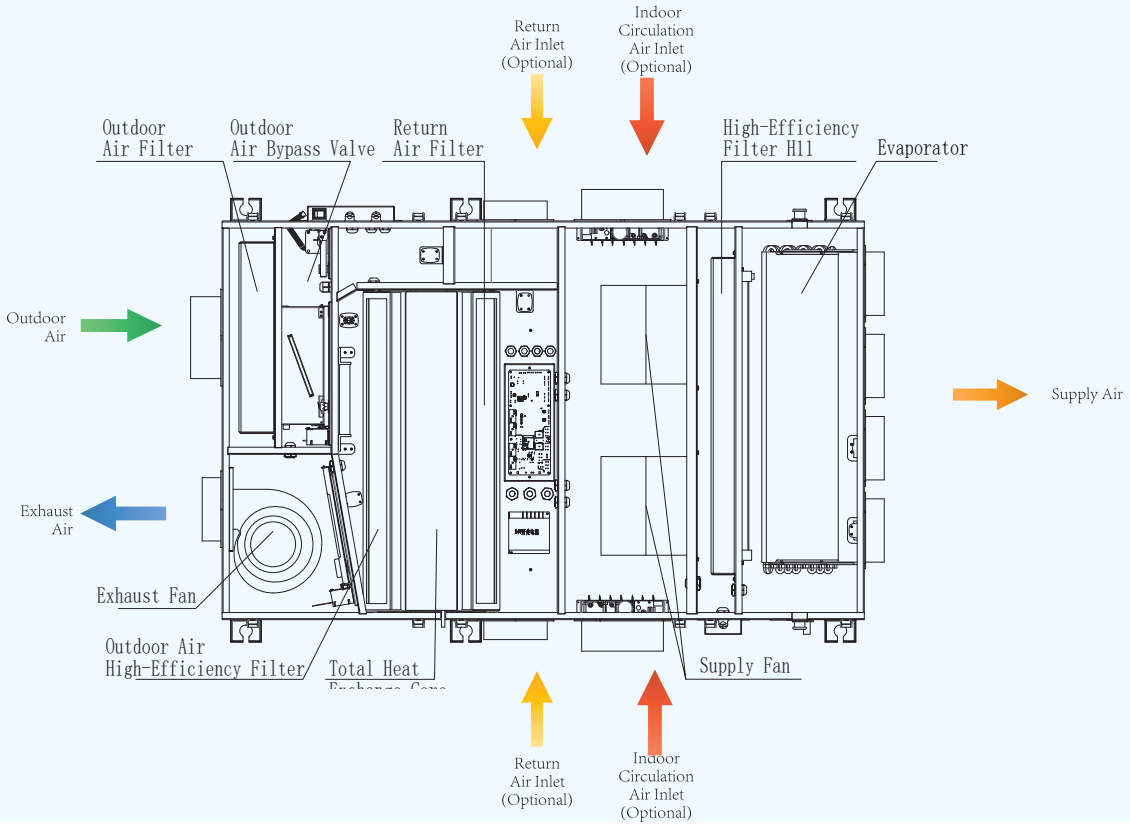

Heat Exchange Core

- Washable Total Heat Exchange Core, with a total heat recovery efficiency of >70% and sensible heat recovery efficiency of >75% under winter heating conditions
- Utilizes graphene-modified antibacterial permeable air membrane, which has gas-blocking and water-permeable properties. The acidic genes on the membrane's surface effectively prevent biological growth, and the antibacterial action of silver ions kills more than 99% of bacteria such as Escherichia coli and Staphylococcus aureus.

Filters

- Fresh air filter: G4+H11, indoor circulation air filter: G4, supply air filter: H11
- According to usage needs, an H11 high-efficiency filter can be installed in the indoor circulation air box (in this case, the supply air H11 filter can be omitted).



Main Display Controller

Control and Automation

- The main display controller is a 7-inch touch screen central control display, integrating PM2.5 sensor, CO2 sensor, temperature and humidity sensor, and TVOC sensor.
- The main display controller monitors air quality in real-time, allows checking the air quality of each partitioned room (if partition control is set), provides feedback on the operation status of the equipment, and allows querying energy consumption data of the device.
- Scene-based application, 4 modes that can be switched as needed: Comfort Mode, Energy-saving Mode, Travel Mode, and Manual Mode.
- The system uses a DC power line carrier control method, with the air quality sensor working in conjunction with the carrier-controlled electric air valves, enabling precise control of the opening and closing of air valves in key rooms, improving customer comfort and convenience.



Air Quality Sensor

- The system also enables linkage with modules such as bathroom exhaust fans or kitchen range hoods, which can be integrated with the device for coordinated operation.



- App Features: Real-time display of indoor temperature, humidity, PM2.5, CO2, TVOC, and other air quality parameters in different zones. Users can remotely adjust the device's operating status and set temperature and humidity parameters. The app also provides access to historical energy consumption data and real-time monitoring of equipment operation.
- The cloud supports both the device and mobile apps, providing a comprehensive operation and maintenance management platform via the Internet of Things (IoT). It allows online observation of the operating status of each system, real-time fault alarms, analysis of operational indicators, and energy consumption data, keeping all data under control. Additionally, future device upgrades and services can be performed through the cloud platform.

Installation

- The indoor unit is designed for ceiling installation and requires hanging feet, hanging rods, nuts, and vibration-damping spring pads. Fasteners must be selected by professionals.
- After installation, a maintenance access panel should be reserved directly beneath the unit. The size of the maintenance access panel should not be smaller than the dimensions of the indoor unit itself.
- The outdoor unit should be installed on a well-ventilated, level outdoor foundation or mounted on a support structure with sufficient load-bearing capacity (the load-bearing capacity of the installation location must be verified).

Naming Convention

Series	Product Type	Installation Type	Outdoor Air Flow [m^3/h]	Cooling Capacity	Structure Type	Device Version
KOMFORT	ICEW:Heat and Cool Source	D: Ceiling Mounted Flange Horizontal	200;250;300	35P:3500W 50P:5000W 70P:7000W	L:Left Type R:Right Typ	4.0 (W)

Dimensions

Model	L	L1	L2	B	D	D1	D2	B1	B2
Komfort ICEW D200 H	1420	480	826	820	250	151	195	280	/
Komfort ICEW D250 H	1530	522	890	950	255	151	195	/	196
Komfort ICEW D300 H	1530	522	890	950	255	151	195	/	196

Note: Sheet metal movable parts 1 and 2 can be replaced with the corresponding air outlet flanges as needed.

Komfort ICEW D200 H

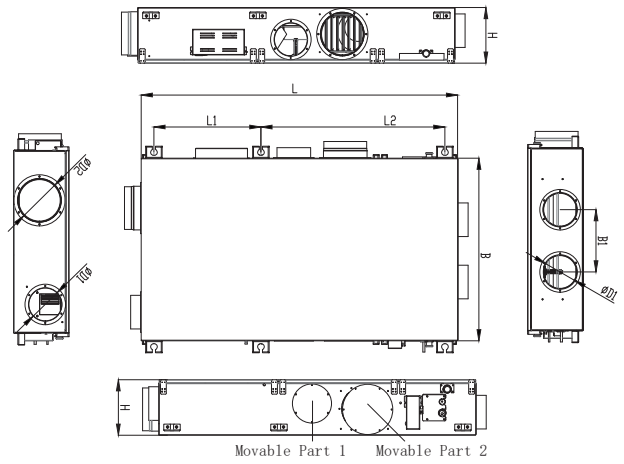

Komfort ICEW D250/300 H

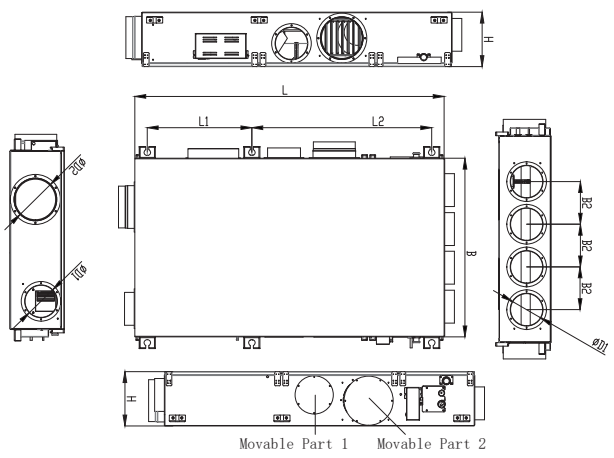

Komfort ICEW D200/250/300 H Movable Part 2Movable Part 1

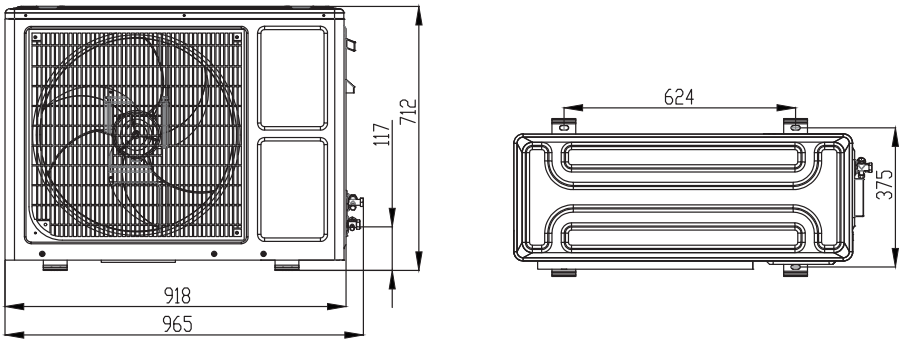

Technical Parameters

Parameter	D200H-35P-L(R)-4.0 (W)	D250H-50P-L(R)-4.0 (W)	D300H-70P-L(R)-4.0 (W)
Power Supply	220V~50Hz		
Rated Outdoor Air Volume [m^3/h]	160	200	300
Rated Exhaust Air Volume [m^3/h]	160	200	300
Rated Supply Air Volume [m^3/h]	600	900	1100
External Static Pressure [Pa]	100 (50~170)		
Heating Sensible Heat Exchange Efficiency [%]	78		
Heating Enthalpy Exchange Efficiency [%]	72		
Filtration Level	Outdoor Air：C4(G4)+YG(H11) Return Air：C4(G4)		
PM2.5 Filtration Efficiency [%]	95		
Cooling Capacity [W]	4600	6400	9200
Heating Power Consumption [W]	1480	2060	2960
Rated Heating Current [A]	6.9	9.5	13.7
Heating Capacity [W]	4600	6400	9200
Heating Power Consumption [W]	1530	2130	3060
Rated Heating Current [A]	7.1	9.9	14.2
Outdoor Air Preheater Input Power [W]	1000		
Cooling Mode COP	3.1		
Heating Mode COP	3.0		
Max Total Power Input [W]	1920	2950	4200
Max Total Current Input [A]	8.9	13.6	19.4
Max Power Input (+Preheater Power) [W]	1920+1000	2950+1000	4200+1000
Max Current Input (+Preheater Current) [A]	13.5	18.2	24
Refrigerant Type	R410A		
Refrigerant Charge [g]	1250	1600	1800
Max Working Pressure [MPa]	4.2		
Refrigerant Piping [mm]	Φ9.52/6.35	Φ12.7/6.35	Φ15.9/6.35
Max Refrigerant Piping Length [m]	15	20	
Max Height Difference Between Units [m]	5	10	
Condensate Drain Pipe Diameter [mm]	PVC25(IDΦ20/ODΦ25)		
Ambient Temperature Range [°C]	-25～45		
Indoor Unit Dimensions L *W * H	1420*820*250	1530*950*255	1530*950*255
Outdoor Unit Dimensions L *W * H	918*365*712		
Indoor Unit Weight [kg]	76	95	95
Outdoor Unit Weight [kg]	39.5	42.5	48.5

Notes:

1.This equipment complies with the standard GB/T 40438-2021 "Integrated Heat Pump Fresh Air Environmental Control Unit".

2.Heat recovery condition: Indoor return air/circulating air: 21°C DB, 13°C WB; Outdoor fresh air: 2°C DB, 1°C WB (DB = Dry Bulb Temperature, WB = Wet Bulb Temperature).

3.Nominal cooling condition: Indoor return air/circulating air: 27°C DB, 19.5°C WB; Outdoor fresh air: 35°C DB, 28°C WB.

4.Nominal heating condition: Indoor return air/circulating air: 21°C DB, 13°C WB; Outdoor fresh air: 2°C DB, 1°C WB.

5.The refrigerant is pre-charged at the factory; if the piping exceeds a certain length, additional refrigerant needs to be added according to the user manual.

INLINE FAN

CONTENTS

- Centro 50
- Turbo 54
- ISO-B 56
- BOX-R 59
- ISO-TET 61
- AXIS-QC 63

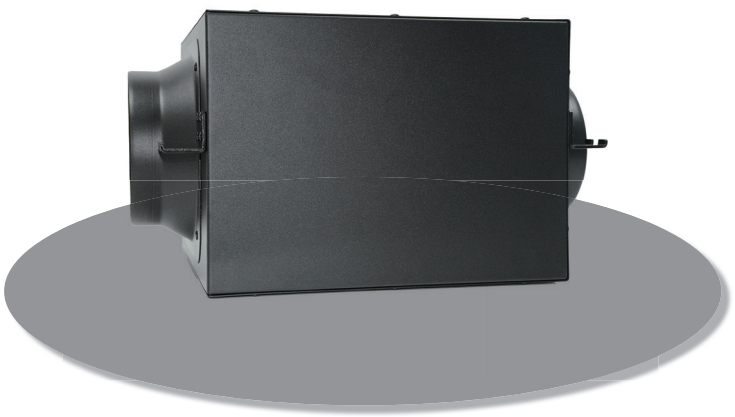

CENTRO

Round Duct Fan



Application

- Hotels, office buildings, and shopping malls: used for fresh air supply and exhaust ventilation in central air conditioning systems to ensure fresh indoor air.
- Factories and workshops: quickly eliminate dust and exhaust gas to improve the working environment; assist in heat dissipation for production line equipment.
- Ships and underground garages: Forced ventilation in enclosed spaces to address the challenge of air circulation.
- Long-distance pipeline pressurization: High static pressure design compensates for air volume loss caused by excessively long pipelines, maintaining stable airflow.
- Complex layout pipeline: spherical structure adapts to elbow and pipeline systems with multiple branches, reducing local resistance.

Maximum Airflow: 1680m³/h

Minimum Power Consumption: 83.1 W

Noise Level: 62 dB(A)

Features

- High static pressure output: Supports efficient air supply and exhaust for ultra-long ducts (such as those over 50 meters), with a static pressure up to 200Pa or higher (depending on the model).
- High air volume coverage: With a maximum air volume of 1680m³/h, it meets the ventilation needs of large-area spaces.
- As low as 62 decibels: The combination of an external rotor centrifugal fan and optimized impeller design results in noise levels significantly lower than those of ordinary axial fans.
- High-efficiency motor: With a minimum power of 83W, it is energy-saving and offers lower long-term usage costs.
- One-piece metal molding: Aluminum alloy/galvanized steel plate shell, corrosion-resistant and deformation-resistant, with a lifespan of over 10 years.
- Wide temperature range operation: Adapt to environments ranging from -20°C to 60°C, ensuring stable operation in both extreme cold and heat.

Motor

- Copper wire motor: fast heat dissipation, long lifespan, low copper wire resistance, low heat generation, avoiding the risk of burnout; high temperature resistant insulation material, ensuring long-lasting performance.
- High torque output: Provides sufficient power at the moment of startup, avoiding the problem of locked-rotor caused by high resistance.
- Outer rotor design: Integrated motor and impeller**: Reduces transmission loss, increasing efficiency by over 15%; Compact structure, reducing overall machine size; Maintenance-free design**: Closed bearing + self-lubricating system, eliminating the need for regular oiling, lowering operation and maintenance costs.

Installation

- Flexible and adaptable space: Ultra-thin and compact, with a small spherical body diameter, it can be embedded into narrow areas such as ceilings, interlayers, and equipment wells, saving space.
- Multi-directional installation: Supports horizontal (ceiling), vertical (riser), inclined, and other angles, without requiring additional bracket adjustments.
- Rapid construction: flange docking design, standard flange interface (100-315mm), directly bolted to the pipeline, no complex modification required.
- Single-person operability: Lightweight body (some models weigh only 5-8kg), making high-altitude work more convenient and safe.
- Convenient maintenance: With a detachable panel and access hole design, there's no need to dismantle the entire machine for filter cleaning or motor inspection, saving both time and effort.

Naming Rules		
Model	**Flange Diameter**	**C**
Centro	100; 125; 160; 200; 250; 315	Made in China

Dimensions

Model	A	B	ØC	D	E	F	G	ØH	I	J	K	L	M	P
Centro 100C	286	306	244	42	600±50	25	25	99	192	8	15	200	156	41
Centro 125C	286	306	244	42	600±50	25	25	123	192	8	15	200	156	41
Centro 160C	384	396	332	42	600±50	23	26	159	236	8	15	244	186	41
Centro 200C	384	396	332	42	600±50	29	26	198	224	8	15	244	186	41
Centro 250C	384	396	332	42	600±50	29	26	248	224	8	15	244	186	41
Centro 315C	448	430	400	42	600±50	25	33	313	239	8	15	244	186	41

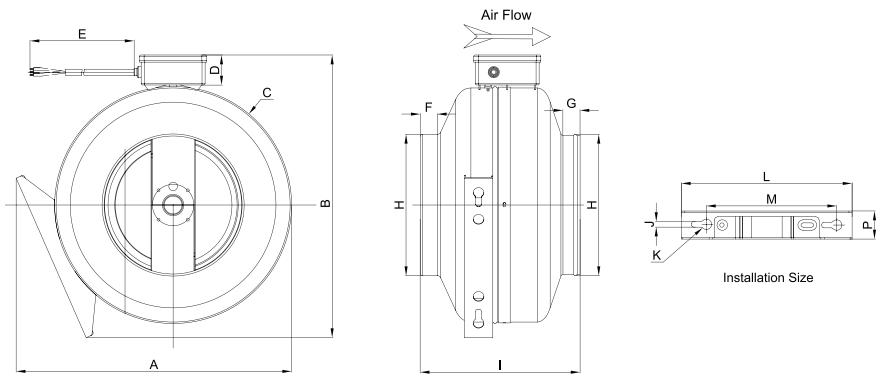

Technical Specifications

Specifications	Centro 100C	Centro 125C	Centro 160C	Centro 200C	Centro 250C	Centro 315C
Power Supply [V/Hz]	220/50	220/50	220/50	220/50	220/50	220/50
Airflow [m³/h]	273	362	740	1130	1180	1680
Static Pressure [Pa]	403	423	580	756	734	850
Power Consumption [W]	104	97	132	242	235	319
Current [A]	0.46	0.43	0.57	1.06	1.05	1.4
Speed [RPM]	3196	3179	2673	2700	2770	2870
Noise Level [dBA]	65	67	68	76	70	77

CENTRO 100C

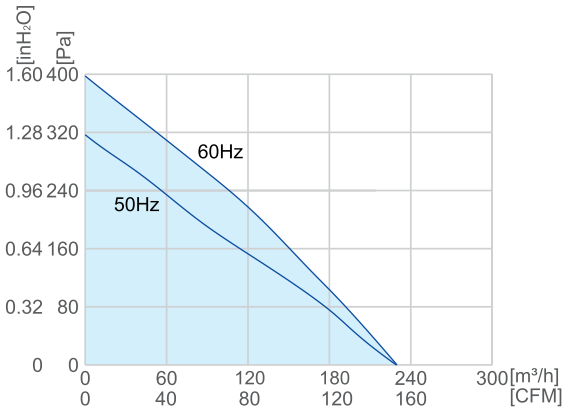

CENTRO 125C

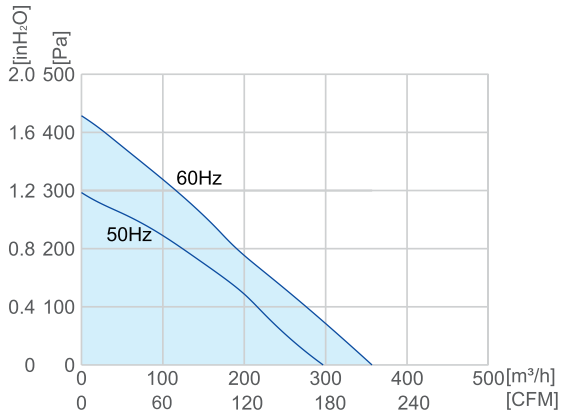

CENTRO 160C

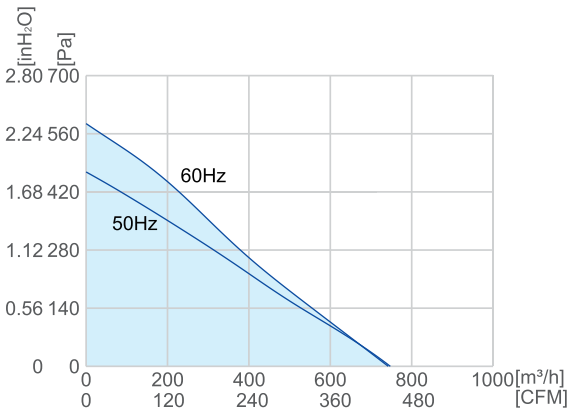

CENTRO 200C

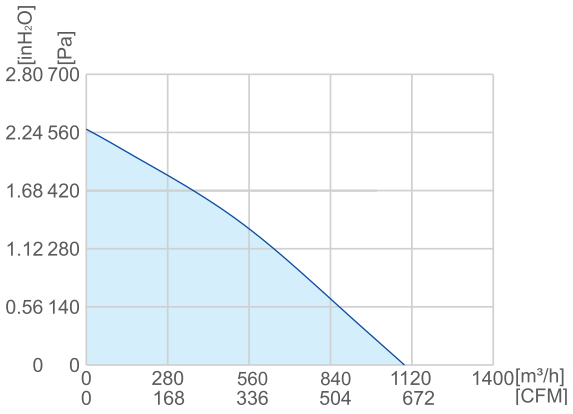

CENTRO 250C

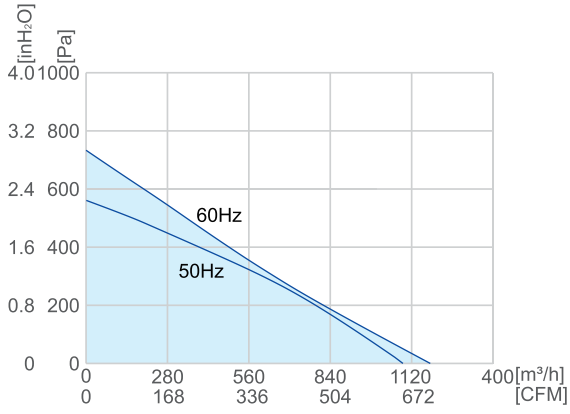

CENTRO 315C

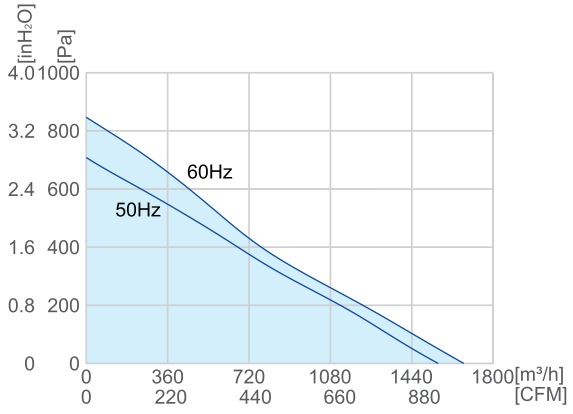

CENTRO EC

Round Duct EC Fan

Application

- Applicable to ventilation in hotels, office-buildings, factories, ships, and other locations;
- Ultra-high static pressure to meet complex-installation environments;
- Suitable for ultra-long-distance airsupply/exhaust orintermediate pipelinepressurization;
- Flange diameter range: 100-315mm.

Maximum Airflow:
1680m^3/h

Minimum Power Consumption:
310 W

Noise Level:
62 dB(A)



Characteristics

- The product adopts a metal shell, is integrally formedand is not prone to deformation.
- Compact in shape, light in weight and easy to install.

EC Motor

- The external rotor centrifugal fan has a higher staticpressure under the same air volume.
- All-copper motor, with an integrated design of motor/impeller, compact structure and high efficiency.

Installation

- Compact design,suitable forinstallation in areas such asceilings,narrow corridors,and equipment rooms;
- It can be installed horizontally or vertically through a fixedbracket.

Dimensions

Model	A	B	ØC	ØD	E	F	G	H	J	ØK	L	M	N
Centro EC 100C	260	286	246	98	25	25	192	700	8	15	200	156	40
Centro EC 125C	262	286	244	123	25	25	192	750	8	15	200	156	40
Centro EC 150C	349	384	332	149	23	26	236	700	8	15	244	186	40
Centro EC 160C	349	384	332	159	25	26	236	700	8	15	244	186	40
Centro EC 200C	349	386	332	198	29	26	224	700	8	15	244	186	40
Centro EC 250C	349	386	332	247	29	26	221	700	8	15	244	186	40
Centro EC 315C	416	448	400	313	25	33	243	650	8	15	244	186	40

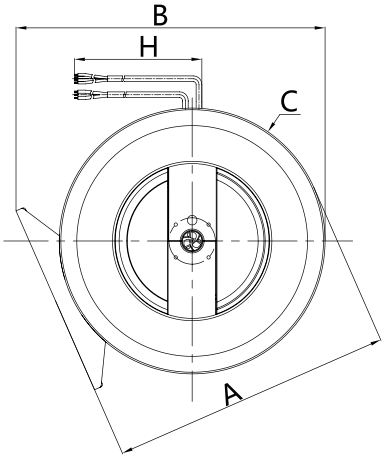

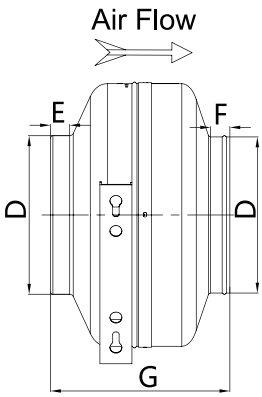

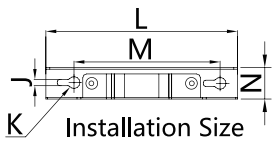

Technical Specifications

Model	Centro EC 100C	Centro EC 125C	Centro EC 150C	Centro EC 160C	Centro EC 200C	Centro EC 250C	Centro EC 315C
Rated Voltage [V]	230	230	230	230	230	230	230
Frequency [Hz]	50/60	50/60	50/60	50/60	50/60	50/60	50/60
Rated Speed [RPM]	3300	3300	2600	2700	3400	2800	2600
Power input Max. [W]	85	85	85	85	170	170	220
Max. Input Current [A]	0.37	0.37	0.37	0.37	0.74	0.74	0.96
Sound Level [dBA]	72	72	72	73	80	78	82
Operating Temp [°C]	-25~+60	-25~+60	-25~+60	-25~+60	-25~+60	-25~+60	-25~+60

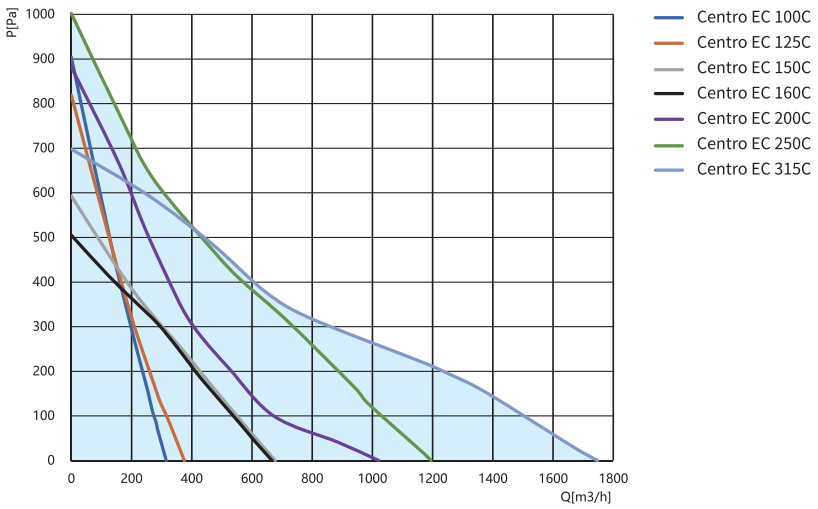

TURBO

Diagonal Flow Duct Fan

Application

- Supply and extract ventilation systems installed in various premises;
- Mounting in kitchens, bathrooms and other humid premises;
- Ventilation air ducts requiring high pressure, powerful air flow and low noise level.
- Compatible with Φ100 up to Φ315 mm round air ducts.

Maximum Airflow: 2065m^3/h

Minimum Power Consumption: 48 W

Noise Level: 30 dB(A)

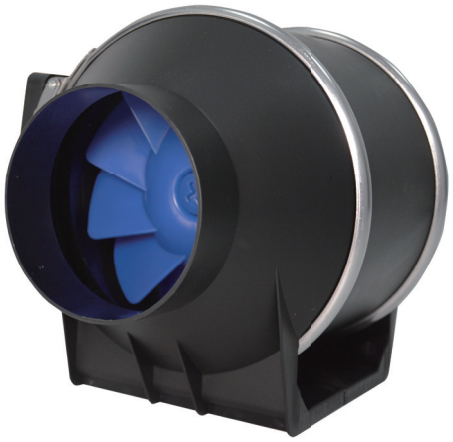

Design

- The casing is made of low-flammable polypropylene.
- Ventilation unit with terminal box. Can be turned to any position.
- Special design of the casing permits easy dismantling of the impeller and motor block for fan servicing without dismantling the air duct.

Motor

- Single-speed AC ball bearing motor (Turbo C V2, two-speed motor optional)

Installation

- Due to the compact design the fan is the ideal solution for mounting in limited spaces, including space behind a false ceiling.
- The fan can be installed in any section of the ventilation system from intake to the end of the ductworks.
- Wall or ceiling mounting with a mounting plate.

Naming Rules		
Model	**Flange Diameter**	**C**
Turbo	100; 125; 150; 200; 250; 315	Made in China

Dimensions

Model	A	ΦB	C	D
Turbo 100C	257	96	200	185
Turbo 125C	257	121	200	185
Turbo 150C	313	146	225	210
Turbo 200C	303	196	245	245
Turbo 250C	385	246	300	280
Turbo 315C	450	310	370	360

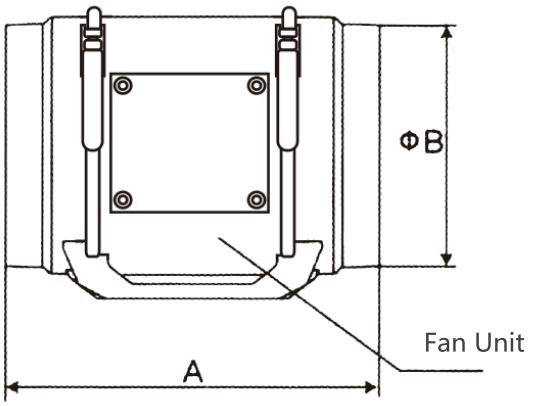

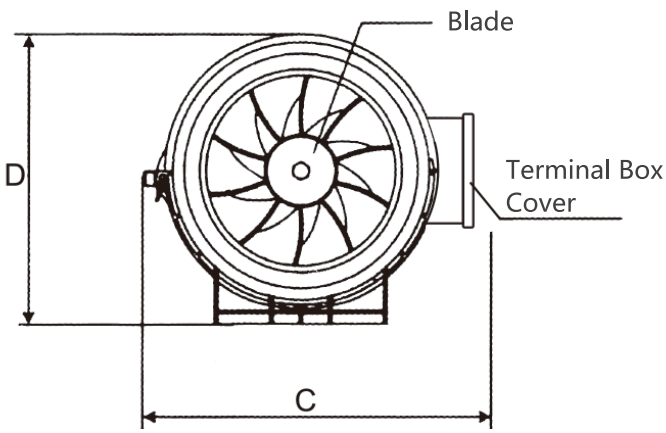

Technical Specifications

Parameter	Turbo 100C	Turbo 125C	Turbo 150C	Turbo 200C	Turbo 250C	Turbo 315C
Power Supply [V/Hz]	220/50	220/50	220/50	220/50	220/50	220/50
Maximum Airflow [m³/h]	209	318	540	985	1354	2065
Maximum Static Pressure [Pa]	220	230	254	341	509	787
Power Consumption [W]	48	48	80	150	240	292
Current [A]	0.22	0.22	0.356	0.68	1.09	1.33
Speed [RPM]	2700	2700	2700	2700	2700	2500
Noise Level [dBA] 3m	30	32	43	63	68	71

TURBO 100C

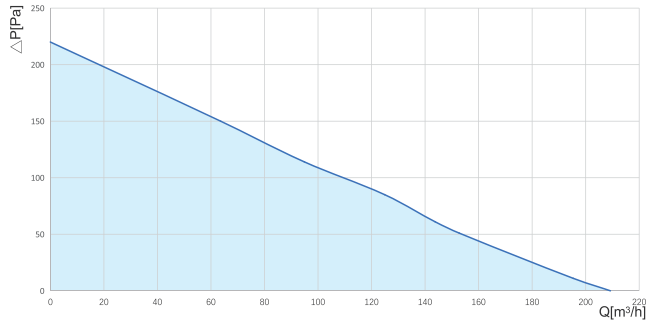

TURBO 125C

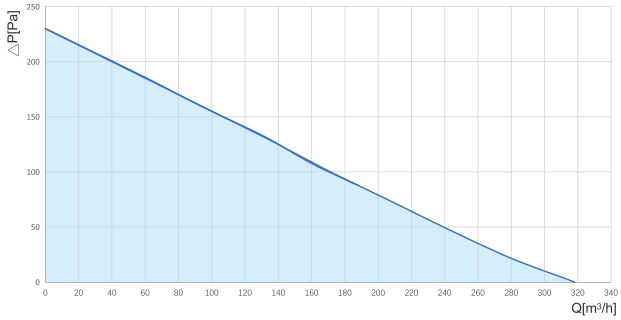

TURBO 150C

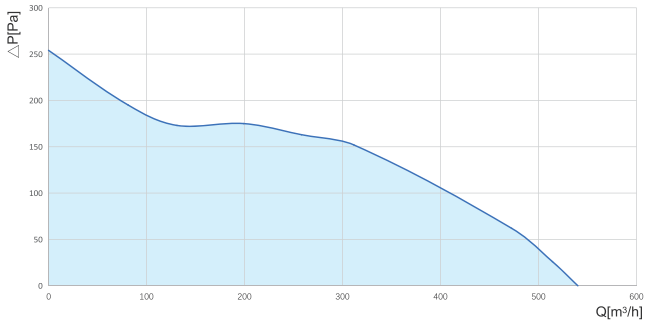

TURBO 200C

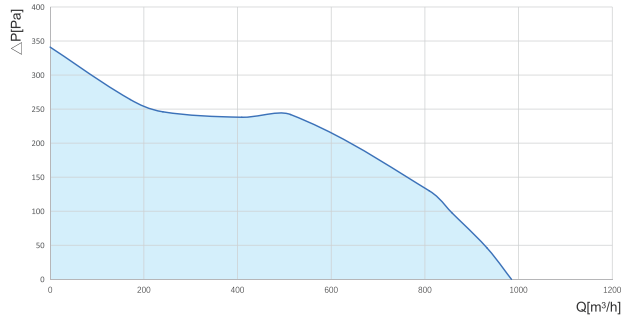

TURBO 250C

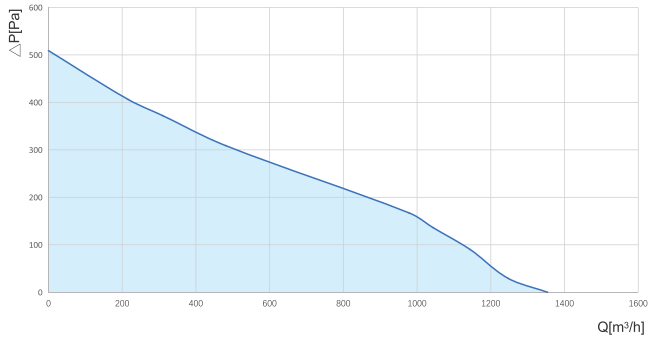

TURBO 315C

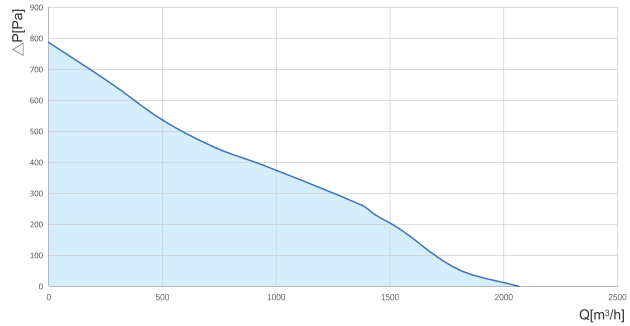

ISO-B

Silent Duct Fan



Maximum Airflow: 2000m³/h

Minimum Power Consumption: 39 W

Noise Level: 20 dB(A)

Application

- Hotel/guesthouse rooms: The bathroom exhaust system ensures fresh air and minimal noise, without disturbing guests' rest.
- High-end office buildings/meeting rooms: Fresh air supply or local exhaust to maintain indoor air quality without generating noise disturbance.
- Shopping malls/restaurants/cafes: kitchen smoke exhaust assistance, bathroom exhaust or regional fresh air, balancing wind pressure while maintaining a quiet environment.
- Hospitals/clinics/nursing homes: Ventilation and low noise levels in wards, consultation rooms, and laboratories are crucial for patient recovery and the working environment.
- School/library: Classrooms, library reading rooms, and bathrooms are well-ventilated to create a quiet learning and working environment.
- Luxury apartments and villas: Centralized exhaust systems for bathrooms and kitchens
- Ventilation for clean workshops, laboratories, and control rooms with noise requirements.
- A stable and quiet production line or equipment room is required for auxiliary ventilation.
- Local ventilation in industries such as electronics, food, and medicine.
- Areas that are extremely sensitive to background noise, such as recording studios, broadcast studios, and theaters
- Ventilation of ship cabins

Features

- Low-speed optimized impeller: The aerodynamically designed wide-blade, large-diameter impeller can provide the required air volume at lower speeds, significantly reducing rotational noise.
- High-efficiency sound-absorbing cotton lining: The inner wall of the equipment casing is covered with high-quality sound-absorbing cotton, effectively absorbing and blocking the airflow noise and mechanical noise generated by the fan operation.
- Fully sealed box structure: Precision sheet metal forming, with good sealing at seams, to prevent noise leakage to the greatest extent.
- Efficient shock absorption design: Equipped with high-quality rubber shock-absorbing pads or shock absorbers as standard, effectively isolating the transmission of motor and impeller vibrations to the pipeline and building structure.
- Overall optimized design: The streamlined air inlet and outlet designs reduce airflow turbulence, further reducing aerodynamic noise.
- High-quality materials: The shell is generally made of high-quality steel plates, which have strong rust and corrosion resistance and a long service life.
- Compact design: Compared to ordinary fans with the same air volume, it is usually designed to be more compact, saving installation space.

Motor

- High-quality and high-efficiency AC induction motor, more energy-saving;
- High-quality bearings: The motor utilizes long-life, pre-lubricated sealed ball bearings, ensuring stable operation and low maintenance requirements.
- Dual-speed adjustment: Equipped with a dual-speed motor as standard, users can easily switch between high speed (full performance) and low speed (lower air volume, lower noise) modes by switching the terminal blocks, adapting to the needs of different seasons or time periods, and balancing air volume with noise/energy consumption.
- Thermal protection: Equipped with a built-in automatic reset thermal protector to prevent the motor from burning out due to overload or locked-rotor conditions.
- Low maintenance: The long-life sealed bearing design basically achieves maintenance-free operation.
- Low vibration: The motor rotor has undergone precise dynamic balancing, ensuring stable operation and minimal vibration.
- Optimized impeller matching: The impeller, motor, and air duct are precisely matched, resulting in high operating efficiency at the target operating point (under common air volume and pressure).

Installation

- Convenient installation bracket, equipped with sturdy metal hanging ears as standard, designed to be lightweight yet highly strong, facilitating easy lifting.
- The standard flange connection is tightly and sealingly connected to the ventilation duct, featuring simple and quick installation as well as reliable sealing.
- Compact space adaptation, ultra-thin design, and low-speed operation allow for installation in confined spaces (such as ceiling voids, pipe shafts) without generating excessive noise interference.
- The design features a removable access cover plate, allowing for simple motor inspection or replacement without the need to completely disassemble the fan, making maintenance more convenient.

Naming Rules			
Model	**Flange Diameter**	**C**	**Stack length**
ISO-B	100; 150; 200; 250	Made in China	20;30;35;40;45

Dimensions

Model	B	B1	B2	B3	B4	W	W1	W2	H	H1	ΦD
ISO-B 100C20	414	290	62	362	322	278	145	248	175	87	100
ISO-B 150C30	550	400	75	472	432	365	195	328	254	131	148
ISO-B 200C35	664	520	71	592	552	509	260	472	295	261	198
ISO-B 250C40	728	560	83	632	592	549	280	512	334	166	248
ISO-B 250C45	728	560	83	632	592	549	280	512	334	166	248

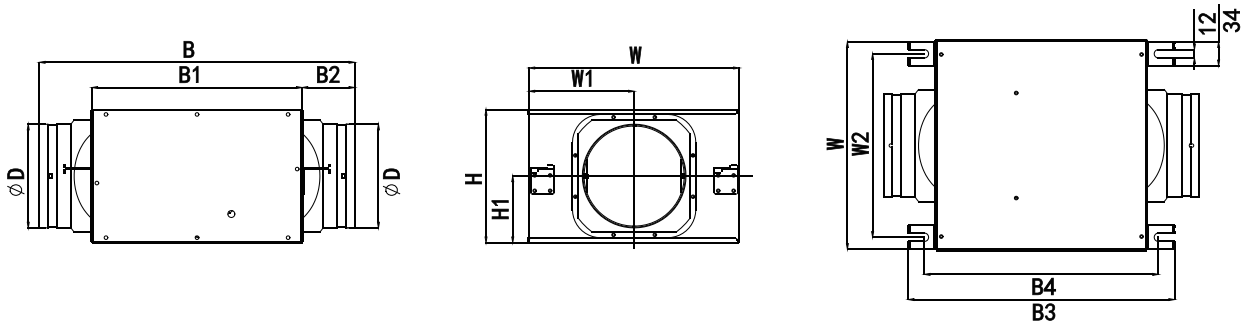

Technical Specifications

Model	ISO-B 100C20	ISO-B 150C30	ISO-B 200C35	ISO-B 250C40	ISO-B 250C45
Power Supply [V/Hz]	220/50	220/50	220/50	220/50	220/50
Max Air Flow [m^3/h]	207	496	850	1500	2000
Max Static Pressure [Pa]	251	178	320	356	381
Max Power [W]	50	94	185	296	491
Current [A]	0.3	0.6	1.3	2.2	3.6
Min Noise Level [dBA]	20	30	35	38	40

ISO-B 100C20

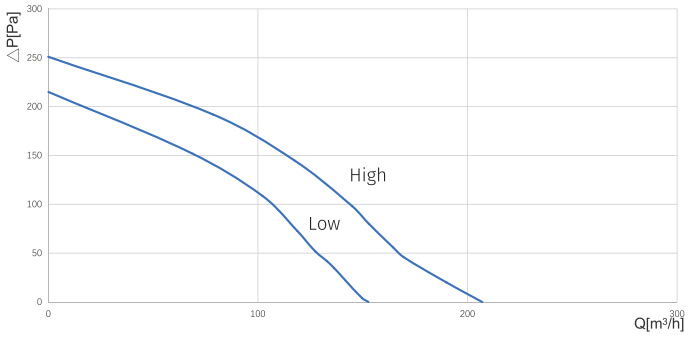

ISO-B 150C30

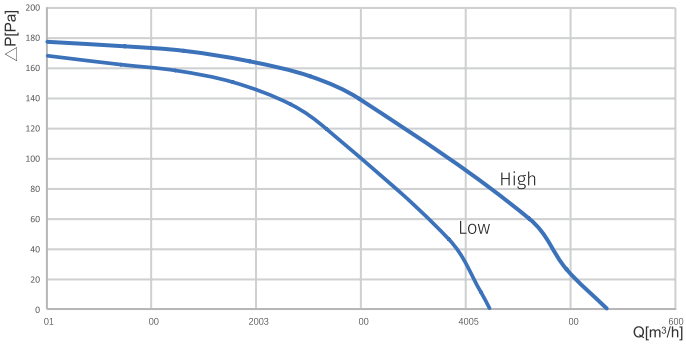

ISO-B 200C35

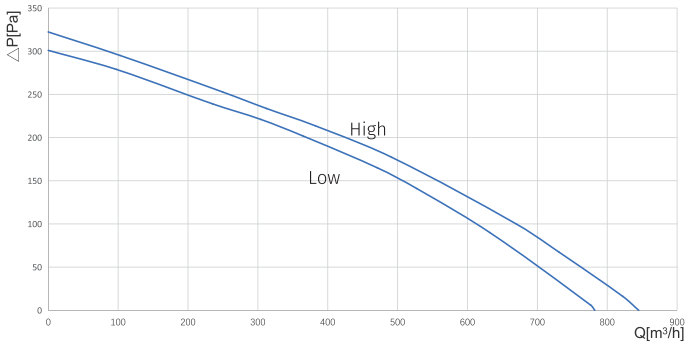

ISO-B 250C40

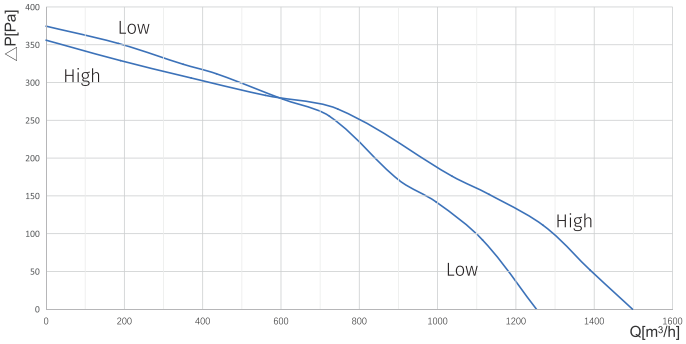

ISO-B 250C45

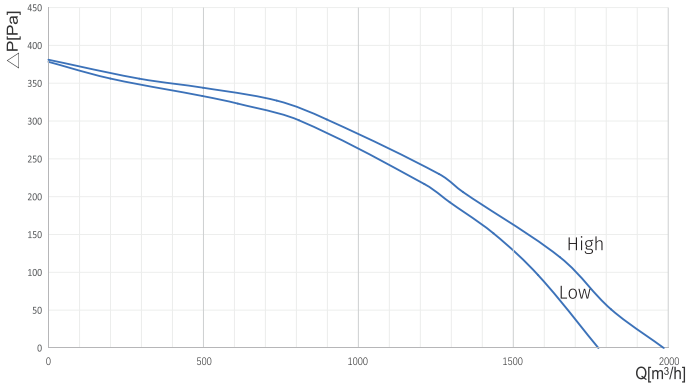

BOX-R

Split Duct Fan



Application

- Split duct fans are primarily used for air exchange and ventilation, and are suitable for residential, commercial, and industrial premises, including but not limited to:
- Residential buildings: areas requiring ventilation such as kitchens, bathrooms, and basements.
- Commercial spaces: ventilation systems in public areas such as restaurants, hotels, office buildings, conference halls, gyms, hospitals, etc.
- Industrial environment: Places such as workshops, warehouses, and computer rooms that require forced ventilation or exhaust.

Maximum Airflow: 1380m³/h

Minimum Power Consumption: 22 W

Noise Level: 36 dB(A)

Features

- 9The main features of split duct fans include:
- Compact design: Small size, easy to install in pipeline systems, saving space.
- Multiple air volume options: Provides different air volume specifications to meet varying spatial needs (such as low air volume for household ventilation and high air volume for commercial or industrial exhaust).
- Low-noise operation: The optimized design of the fan wheel and volute passage reduces airflow noise and enhances silent performance.
- Long air supply distance: The 90° right-angle design of the air inlet reduces air resistance, ensures smooth airflow, and improves air supply efficiency.
- Flexible installation: Supports multiple installation methods (horizontal, vertical, wall-mounted, etc.), adapting to different pipeline layout requirements.
- High durability: High-quality materials are used to ensure long-term stable operation.

Motor

- The motor of a split duct fan is its core component, typically featuring the following characteristics:
- Copper wire stator: good conductivity, high motor efficiency, reduced heat generation, and extended service life.
- High-efficiency bearing: The use of rolling bearings reduces friction loss, ensures smoother operation, and prolongs service life.

Naming Rules		
Model	**Flange Diameter**	**C**
BOX-R	100;150; 200	Made in China

Dimensions

Model	A	B	Ø C	D	E	F	G	H	L
BOX-R 100C	210	182	99	100	114	201	117	172	6*16
BOX-R 150C	268	230	149	130	151	254	120	206	6.5*20
BOX-R 150C1	286	250	149	142	157	278	160	218	6.5*20
BOX-R 150C2	286	250	149	142	157	278	160	218	6.5*20
BOX-R 200C	345	300	199	188	212	346	160	305	10*20
BOX-R 200C1	345	300	199	188	212	346	160	305	10*20
BOX-R 200C2	345	300	199	188	212	346	160	305	10*20
BOX-R 200C3	376	330	199	224	255	374	200	345	12*24
BOX-R 200C4	376	330	199	224	255	374	200	345	12*24

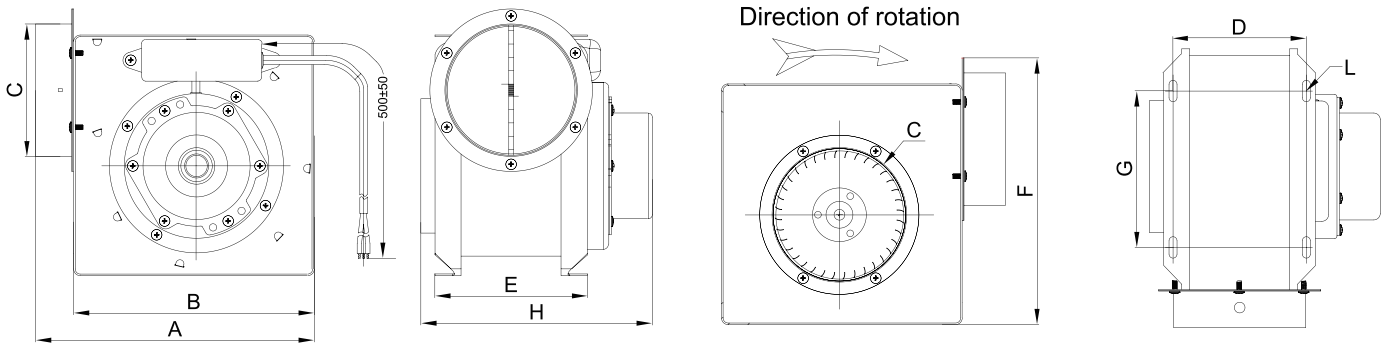

Technical Specifications

Parameter	BOX-R 100C	BOX-R 150C	BOX-R 150C1	BOX-R 150C2	BOX-R 200C	BOX-R 200C1	BOX-R 200C2	BOX-R 200C3	BOX-R 200C4
Power Supply [V/Hz]	230/50	230/50	230/50	230/50	230/50	230/50	230/50	230/50	230/50
Maximum Airflow [m³/h]	151	289	381	485	625	752	1012	1220	1380
Maximum Static Pressure [Pa]	65	98	115	140	110	195	210	220	239
Power Consumption [W]	22	39	45	85	61	95	160	203	253
Current [A]	0.11	0.19	0.21	0.39	0.28	0.43	0.72	0.92	1.13
Speed [RPM]	1390	1200	1350	1250	840	950	1165	1090	1200
Noise Level [dBA]	36	42	46	48	48	48	50	55	58

BOX-R 100C-200C4

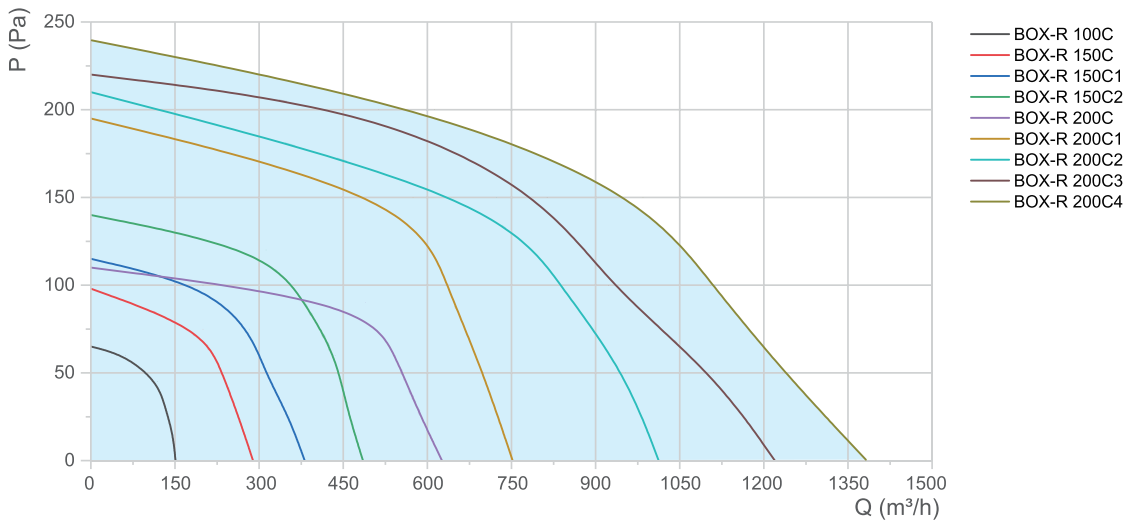

ISO-TET

Smart Exhaust Fan

Application

- Suitable for multiple scenarios and environments: for example, removing odors and humidity from bathrooms, or ventilating spaces like game rooms, gyms, and kitchens where odors are generated.
- Designed for applications requiring high exhaust volume, high static pressure, and low noise.
- Available with flange diameters of Φ104 mm and Φ158 mm.

Maximum Airflow: 300m³/h

Minimum Power Consumption: 29 W

Noise Level: 36 dB(A)



Features

- Adaptive Exhaust Technology: Built-in high-sensitivity sensors (TVOC and humidity sensors) that adjust fan speed and airflow in real time.
- Low power consumption during low-speed operation.
- Reserved ports for passive linkage with fresh air systems, meeting the demand for indoor slight positive pressure.

Installation

- Ceiling-mounted installation within the usage area using suspension rods fixed with expansion bolts.
- The air inlet and outlet are connected using circular air ducts.
- Pre-reserved mounting holes allow for multi-angle installation.

Intelligent Automatic Control

- Flange openings are reserved for easy duct connection and fixation.
- The air inlet and outlet are positioned at a 90-degree angle, saving one elbow fitting while ensuring airflow and air pressure.
- Pre-reserved mounting holes allow for multi-angle installation.

Motor

- High static pressure centrifugal DC fan with powerful airflow, low noise, and high efficiency.
- Adaptive speed control technology with 0–10 level proportional automatic adjustment.
- Protection rating: IPX4.

Naming Rules	
Model	**Specification**
ISO-TET	150：Rated Air Volume 150m³/h
	300：Rated Air Volume 300m³/h

Dimensions

Model	L	L1	L2	L3	B	B1	H	ΦD
ISO-TET 150	360	285	501	120	308	348	192	104
ISO-TET 300	360	285	501	120	308	348	192	158

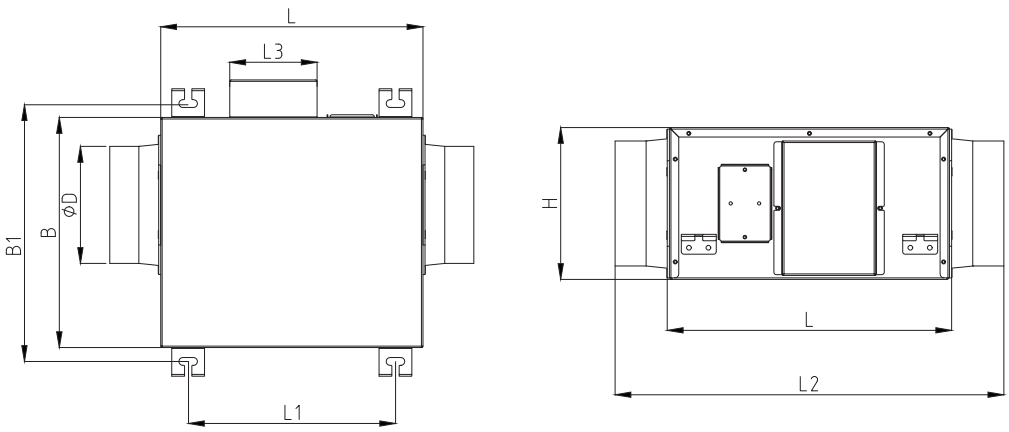

Technical Parameters

Parameter	ISO TET 150	ISO TET 300
Product Dimensions [L*W*H]	360*308*192mm	360*308*192mm
Rated Power Supply	220V~50Hz	220V~50Hz
Rated Power [W]	29	58
Rated Current [A]	0.13	0.26
Rated Air Volume [m^3/h]	150	300
External Static Pressure [Pa]	100	120
Noise Level [dB(A)]	36	40
Flange Diameter [mm]	104	158
Weight [kg]	7	7

Test Condition Notes

1. Air volume, power, and other data are measured in a wind tunnel lab with the unit' s supply air outlet connected.
2. Noise level is measured in a sound testing room, with the device connected to standard air ducts, at a distance of 1.5 meters below the unit.

ISO TET 150

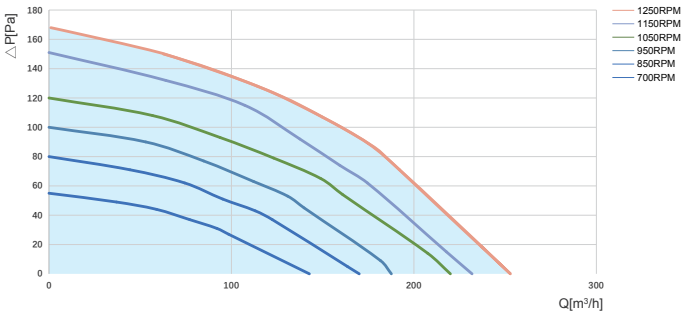

ISO TET 300

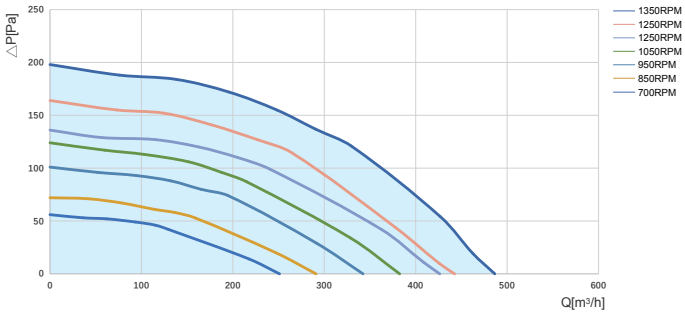

Axis-QC

Axial wall fans

Use

- Supply and extract ventilation systems installed in various premises.
- Ideal solution for boosting large air volumes at low aerodynamic resistance in the ventilation system.
- Refrigerating technologies for cooling of compressor condensing units.
- Direct air extract.
- For positive pressure ventilation in fire-fighting systems.

Air flow:
up to 9960 m³/h
2767 l/s

Power:
from 45 W

Noise level:
from 54 dBA



Design

- Steel casing and impeller with a special polymer atmospheric resistant coating.
- Casing is equipped with a square mounting plate to facilitate wall mounting.
- The fan is equipped with a terminal box for connection to power mains.

Motor

- Four- or six-pole asynchronous motor with external rotor and axial impeller.
- Single-phase (E) motor modifications.
- Equipped with ball bearings for longer service life.
- Integrated overheating protection with automatic restart.

Speed control

- Smooth speed control with an external thyristor controller or step speed control with an external auto transformer;

Mounting

- Wall surface mounting with a square connecting frame.
- Any mounting position with respect to air flow direction in the system.
- Power is supplied through an external terminal box.

Dimensions [mm]

Type	A	B	C	D	E	F	G	H	I	T	Weight [kg]
Axis-QC 250 4E	370	320	250	260	275	45	53	7	-	-	3.5
Axis-QC 300 4E	410	355	300	310	325	65	28	9	-	-	5
Axis-QC 350 4E	485	435	350	359	375	80	65	9	-	-	7.8
Axis-QC 400 4E	540	490	400	410	425	90	75	9	-	-	8.8
Axis-QC 450 4E	575	535	445	530	36	130	30	11	12	7	10.5
Axis-QC 500 4E	655	615	500	582	36	145	30	11	14	8	14
Axis-QC 550 4E	725	675	550	651	36	152	30	11	14	10	16.5
Axis-QC 630 4E	805	750	630	736	36	185	30	11	16	10	20
Axis-QC 500 6E	655	615	500	582	36	145	30	11	14	3	14.2
Axis-QC 550 6E	725	675	550	651	36	152	30	11	14	10	16.3
Axis-QC 630 6E	805	750	630	736	36	185	30	11	16	10	20.1

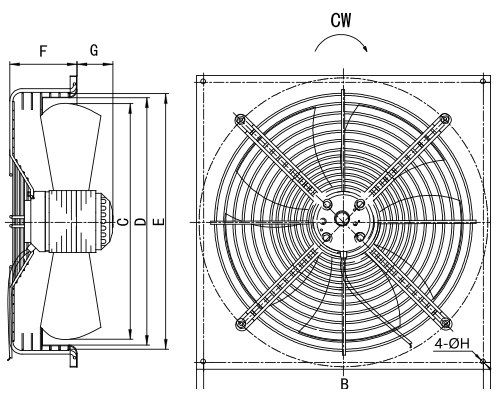

Axis-QC 250/300/350/400 4E

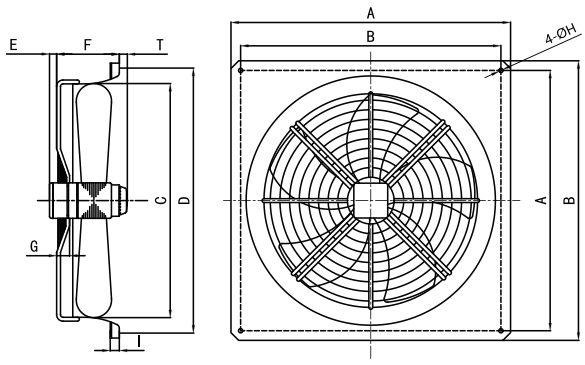

Axis-QC 450/500/550/630 4E
Axis-QC 500/550/630 6E

Technical data

Parameters	Axis-QC 250 4E	Axis-QC 300 4E	Axis-QC 350 4E	Axis-QC 400 4E	Axis-QC 450 4E	Axis-QC 500 4E
Voltage [V]	1~230	1~230	1~230	1~230	1~230	1~230
Frequency [Hz]	50	50	50	50	50	50
Power [W]	45	89	192	239	415	643
Current [A]	0.21	0.41	0.8	1.09	1.81	3
Maximum air flow [m³/h (l/s)]	1039(289)	1757(488)	3012(834)	4069(1130)	5750(1597)	7903(2195)
RPM [min-1]	1357	1354	1381	1353	1354	1372
Sound pressure at 1 m [dBA]	54	59	64	68	71	73
Transported air temperature [°C]	-25...+60	-25...+60	-25...+60	-25...+60	-25...+60	-25...+60
IP rating	IP2X	IP2X	IP2X	IP2X	IP2X	IP2X
Motor IP rating	IP44	IP54	IP54	IP54	IP54	IP54
Motor insulation class	F	F	F	F	F	F

Axis-QC 250 4E

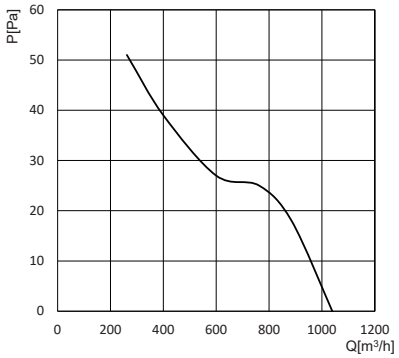

Axis-QC 300 4E

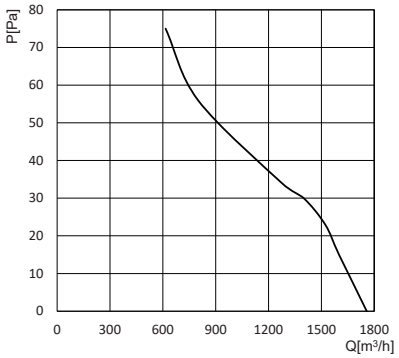

Axis-QC 350 4E

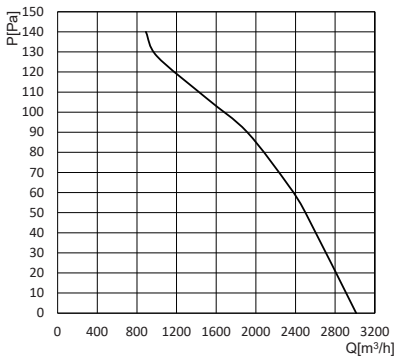

Axis-QC 400 4E

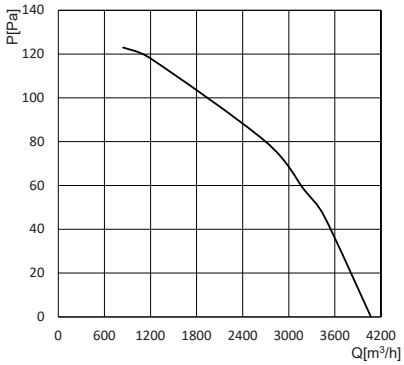

Axis-QC 450 4E

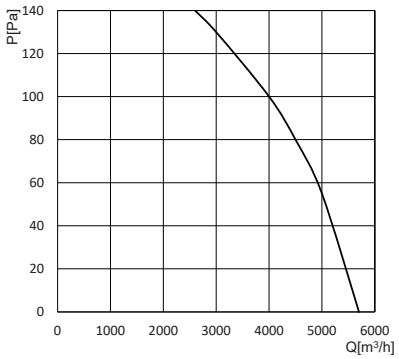

Axis-QC 500 4E

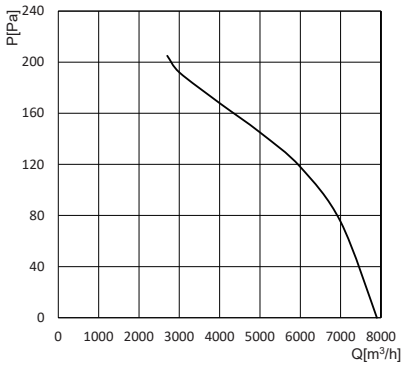

Technical data

Parameters	Axis-QC 550 4E	Axis-QC 630 4E	Axis-QC 500 6E	Axis-QC 550 6E	Axis-QC 630 6E
Voltage [V]	1~230	1~230	1~230	1~230	1~230
Frequency [Hz]	50	50	50	50	50
Power [W]	580	805	246	320	479
Current [A]	2.64	3.86	1.12	1.47	2.22
Maximum air flow [m³/h (l/s)]	8355(2320)	9960(2767)	5500(1527)	6947(1929)	9250(2569)
RPM [min-1]	1389	1398	880	911	919
Sound pressure at 1 m [dBA]	75	75	66	69	71
Transported air temperature [°C]	-25...+60	-25...+60	-25...+60	-25...+60	-25...+60
IP rating	IP2X	IP2X	IP2X	IP2X	IP2X
Motor IP rating	IP54	IP54	IP54	IP54	IP54
Motor insulation class	F	F	F	F	F

Axis-QC 550 4E

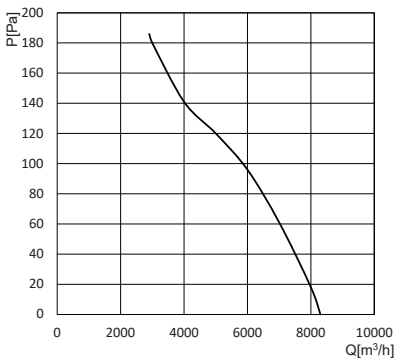

Axis-QC 630 4E

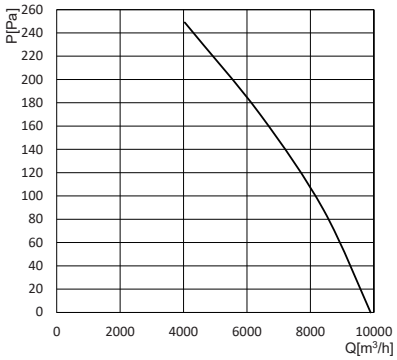

Axis-QC 500 6E

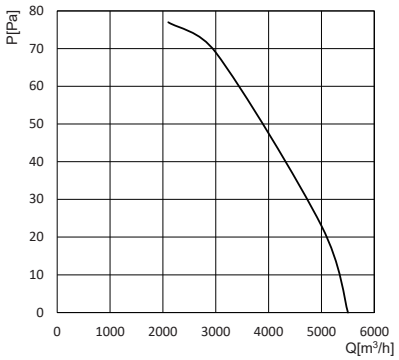

Axis-QC 550 6E

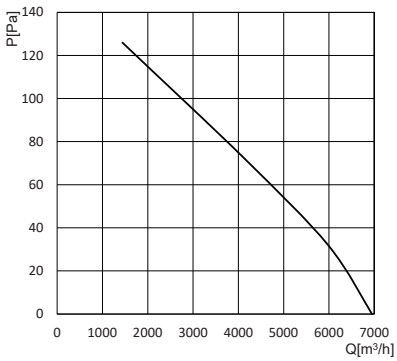

Axis-QC 630 6E

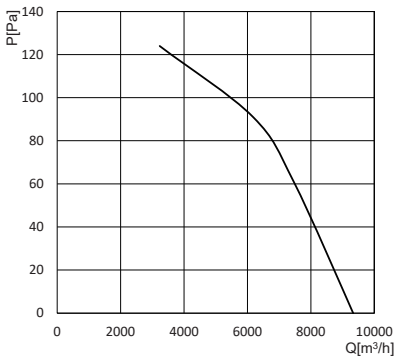

DOMESTIC FAN

CONTENTS

- *Ceileo Bre/Zug FLSP-1* 68
- *Cassia* 69
- *Cassia-M* 70



Ceileo Bre/Zug FLSP-1

Features

- Ceiling installation;
- Equipped with an AC motor;
- Easy maintenance;
- Continuous operation;
- Backdraft damper;
- Ball bearing motor;
- 2 year warranty;
- The integrated ceiling is installed directly, and the gypsum board ceiling is installed in conjunction with the conversion frame(Purchase separately);

Air flow:
up to 180 m^3/h

Power:
from40 W

Noise level:
from 41 dBA



Overall dimensions

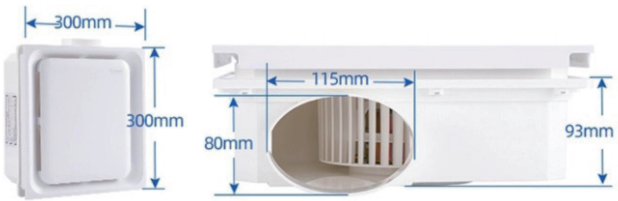

Technical data

Model	Ceileo Bre FLSP-1	Ceileo Zug FLSP-1
Voltage [V/Hz]	220	220
Power [W]	40	40
Air volume [m^3/h]	180	180
Sound pressure at 3m [dBA]	41	41

CASSIA

Centrifugal Fans

Application

- Centrifugal exhaust low noise and low power fans for ceiling mounting

Air flow: up to 187 m^3/h
110 CFM
52 l/s

Power : from 33 W
SFP:from 0.65 w/l/s

Noise Level:
from 30 dB(A)



Features

- Intermittent or continuous ventilation of bathrooms, showers, kitchensand other domestic spaces.
- For high-resistant ventilation systems.
- Low noise level.
- The centrifugal impeller for high pressure and low noise.
- The fans also feature a gravity backdraft damper.



- Ingress protection rating IPX4.

Design

- The casing is made of high quality plastic.



- The clip-on plastic grille ensures easy mounting and cleaning of the fan.
- Best aerodynamic characteristics due to a special scroll casing design.
- The modular design.

Mounting

- The fan is integrated into ceiling spaces.
- The flexible air duct is attached to the fan exhaust spigot with a fixing-clamp.

Dimensions

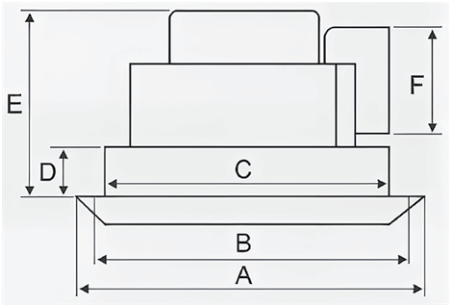

Dimensions [mm]	A	B	C	D	E	ØF
Cassia 80	254	225	205	40	162	100
Cassia 150	254	225	205	40	162	100
Cassia 190	290	267	230	40	162	100

Designation key	
Cassia	**190**
Series	Rated air flow [m^3/h]

Technical data

Parameter	Cassia 80	Cassia 150	Cassia 190
Voltage [V/Hz]	220-230/50 (60)	220-230/50 (60)	220-230/50 (60)
Power [W]	33	33	34
Current [A]	0.15	0.15	0.15
Maximum air flow [m^3/h]	85	140	187
Maximum air flow [l/s]	24	39	52
Maximum air flow [CFM]	50	82	110
SFP [W/l/s]	1.40	0.85	0.65
Sound pressure level [dBA]*	30	30	30
Ingress protection	IPX4	IPX4	IPX4

* Sound pressure level measured in free space at a distance of 3 meters from the fan.

CASSIA-M

Centrifugal Fans

Application

- Centrifugal exhaust low noise and low power fans for ceiling mounting

Air flow: up to 187 m³/h
110 CFM
52 l/s

Power : from 17 W
SFP:from 0.49 w/l/s

Noise Level:
from 17 dB(A)



Features

- Intermittent or continuous ventilation of bathrooms, showers, kitchens and other domestic spaces.
- For high-resistant ventilation systems.
- Low noise level.
- The centrifugal impeller for high pressure and low noise.
- The fans also feature a gravity backdraft damper.



- Ingress protection rating IPX4.

Design

- The casing is made of galvanized steel.



- The clip-on plastic grille ensures easy mounting and cleaning of the fan.
- Best aerodynamic characteristics due to a special scroll casing design.
- The modular design.

Mounting

- The fan is integrated into ceiling spaces.
- The flexible air duct is attached to the fan exhaust spigot with a fixing-clamp.

Dimensions

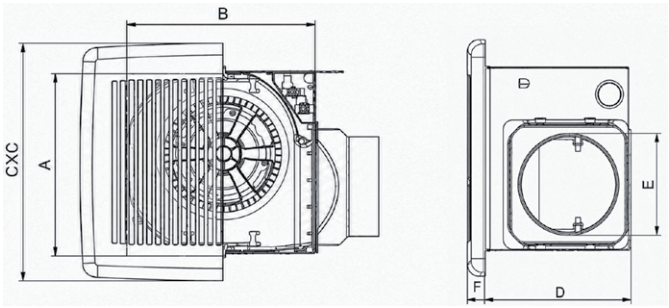

Dimensions [mm]	A	B	C	D	ØE	F
Cassia-M 80	186	192	242*242	146	100	20
Cassia-M 150	186	192	242*242	146	100	20
Cassia-M 190	186	192	242*242	146	100	20

Designation key	
Cassia-M	**190**
Series	Rated air flow [m³/h]

Technical data

Parameter	Cassia-M 80	Cassia-M 150	Cassia-M 190
Voltage [V/Hz]	220-230/50 (60)	220-230/50 (60)	220-230/50 (60)
Power [W]	17	19	26
Current [A]	0.08	0.10	0.15
Maximum air flow [m³/h]	85	140	187
Maximum air flow [l/s]	24	39	52
Maximum air flow [CFM]	50	82	110
SFP [W/l/s]	0.72	0.49	0.50
Sound pressure level [dBA]*	17	20	30
Ingress protection	IPX4	IPX4	IPX4

* Sound pressure level measured in free space at a distance of 3 meters from the fan.

ACCESSORIES

CONTENTS

DF-OH -1 73

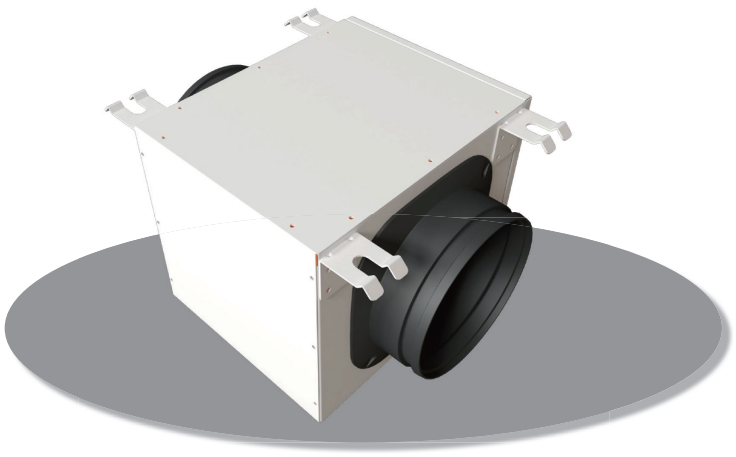

DF-OH -1

Blaufion Nano Particle Sterilization and Disinfection Module

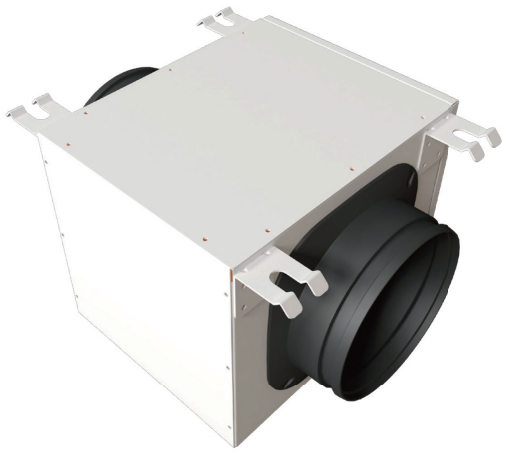

Application

- This device is designed to be used in conjunction with MERENFORT DOF and MERENFORT DTF dehumidifiers.
- It can kill bacteria (Staphylococcus albus) and viruses (Influenza A Virus (H1N1)) in the air.
- It is easy to install.

Design

- The natural lightning and waterfall effect is simulated. The water ion obtains water from the air with no need of adding water). Water is ionized by the high-voltage electric field to generate nanoe (electron avalanche effect).
- Rich in highly active hydroxyl (·OH), able to extract hydrogen from bacteria &viruses, and combine with it to generate water..OH + · H→H20. So as to inhibit bacteria and destroy protein of viruses.

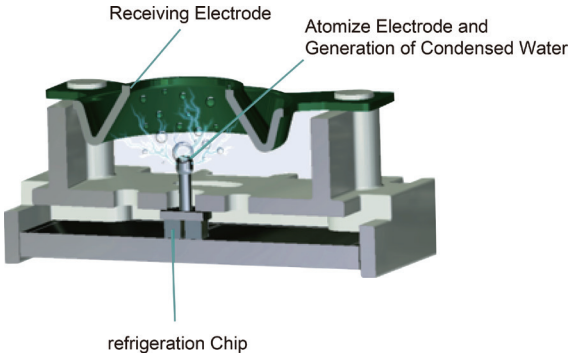

Dimensions

Model	A	B	C	D	E
DF-OH -1	202	312	250	199	242-246

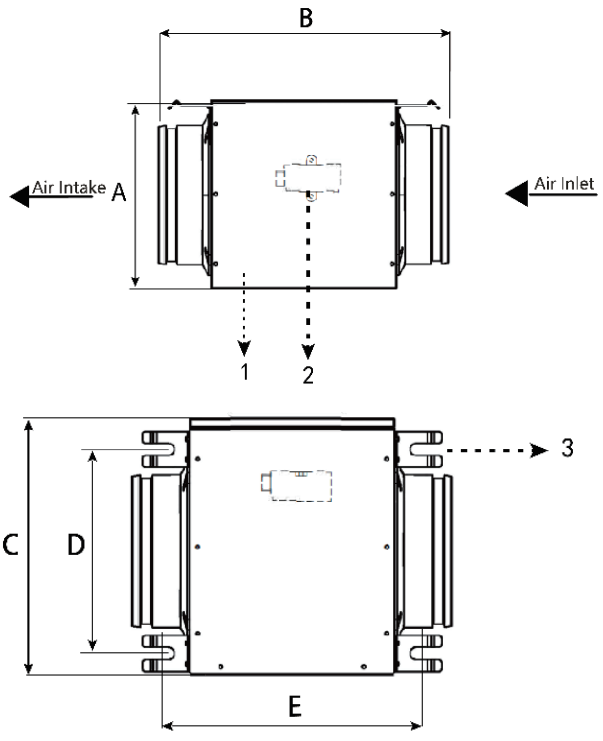

Technical Specifications

Product Parameters	
Input Voltage	12V DC
Rated Power	<0.36W
Sterilization Rate	99%
Ozone Emission	<0.019mg/m3
Operating Noise	<35dB
Lifespan	>100000 hours

NOTES