BSK2

Fire-resisting dampers

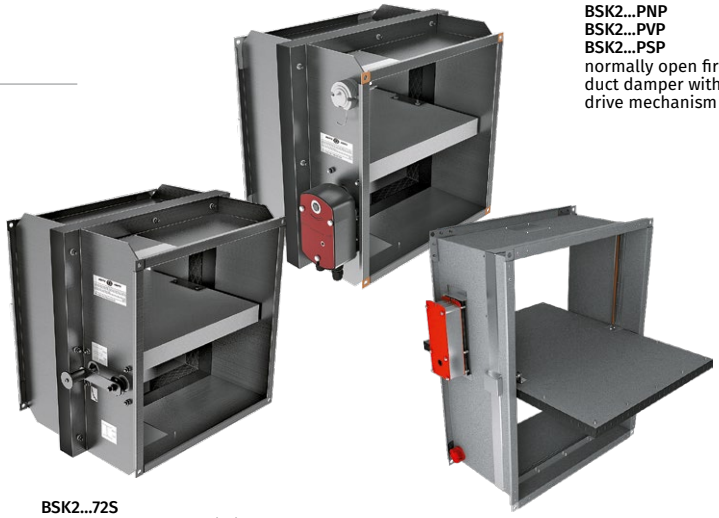

BSK2...PNP
BSK2...PVP
BSK2...PSP
normally open fire-resisting duct damper with an electric drive mechanism

BSK2...72S
normally open fire-resisting duct damper with a mechanical drive mechanism

BSK2...PNP...S
BSK2...PVP...S
BSK2...PSP...S
normally open fire-resisting duct damper with a simplified design with an electric drive mechanism

Use

- The fire-resisting dampers are intended for automatic closing of process openings and air duct penetrations in intermediate floors, walls and partitions, as well as closing of openings in supply and exhaust ducts of smoke ventilation systems. The dampers of this particular design are not suitable for installation in air ducts and ducts of premises with rated explosion and fire safety category A and B and in flammable and explosive mixture intakes. The **BSK2** fire-resisting duct dampers are capable of resisting fire for at least 120 minutes (EI 120) at the temperature of 600 °C.

Design

- The **BSK2** series dampers are made in the general industrial version with a minimized variety of hardware components using low-alloy galvanized steel. The damper flap is made of fire-resistant material.
- The duct installation design results in two mounting flanges on the casing for integration into ventilation ducts (air ducting) and external configuration of the drive mechanism for easier maintenance.
- The **BSK2...PNP/ BSK2...PVP/ BSK2...PSP** dampers are equipped with a hot and cold zone baffle.
- The **BSK2...PNP...S/ BSK2...PVP...S/ BSK2...PSP...S** dampers have a simplified construction:
  - Simplified damper swing mechanism
  - The zone baffle has been replaced by casing perforation covered with ceramic fibre material and aluminium foil tape
  - New material and altered flap thickness.

Control and modifications

- Depending on the design variant the **BSK2** series dampers are equipped with:

MECHANICAL ACTUATING UNIT WITH A THERMAL FUSE AND A RETURN SPRING

- The damper is set to the operating position upon the thermal fuse breakdown resulting from a temperature increase. The damper can then be re-set to the protective position only manually by using a handle and by replacing the thermal fuse through the access hole.
- Emergency damper actuation: the flap remains in protective position (damper unaffected by fire) and is fixed by a thermal fuse (when the flap is installed in security position, a reverse spring is activated). Upon emergency actuation (damper directly affected by fire) the thermal fuse breaks down and the return spring moves the flap to operating position.

ELECTRIC ACTUATOR WITH A BUILT-IN RETURN SPRING AND A BACK-UP THERMAL BREAKER

- Setting the damper to operating position (direct fire contact): remotely, via electric actuator. The damper can be set to the operating or protective position either remotely via the control panel or manually using the manual cocking handle which is always included in the standard delivery set of the electric actuator.
- In case of the remote control panel failure, the back-up thermal breaker interrupts the power supply to the electric actuator and the return spring sets the damper to the operating position.
- Emergency damper actuation: The damper flap is set to the protective position automatically (damper unaffected by fire). The electric actuator remains energized at all times.
- In case of an emergency actuation (direct fire contact), the electric actuator equipped with a return spring is de-energized and the damper flap is set to the operating position by means of the spring energy. In case of a power failure not related to fire and its subsequent restoration at the actuator with a return spring, the damper flap returns to protective position.

Designation key

BSK 2 20x30 / 2 PVP24T / O S

Series:
Fire-resisting damper

Fire resistance:
2: 2 hours

Damper flow area width [cm]:
20; 25; 30; 40; 50; 60; 80; 100

Damper flow area height [cm]:
20; 25; 30; 40; 50; 60; 80; 100

Number of flanges:
1: one
2: two

Actuator type:
72S: thermal fuse and return spring (manual actuation)
PNP24T: 24 V NENUTEC electric actuator with a return spring and a thermal breaker
PNP230T: 230 V NENUTEC electric actuator with a return spring and a thermal breaker
PVP24T: 24 V BELIMO electric actuator with a return spring and a thermal breaker
PVP230T: 230 V BELIMO electric actuator with a return spring and a thermal breaker
PSP24T: 24 V SIEMENS electric actuator with a return spring and a thermal breaker
PSP230T: 230 V SIEMENS electric actuator with a return spring and a thermal breaker

Electric actuator location:
O: outside
I: inside (except for dampers with height or width less than 30 cm)

Design variant:
_: ordinary damper design
S: simplified damper design

THE BSK2...72S FIRE SAFETY DAMPER WITH A MECHANICAL ACTUATING UNIT WITH A THERMAL FUSE AND A RETURN SPRING

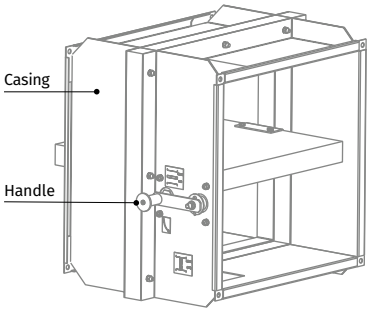

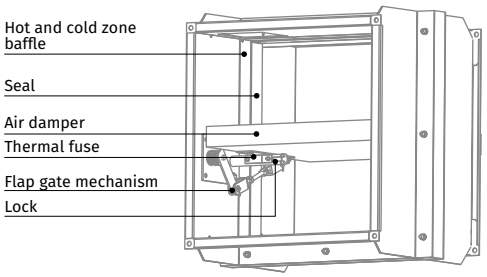

THE BSK2...PNP/BSK2...PVP/BSK2...PSP FIRE SAFETY DAMPER WITH AN ELECTRIC ACTUATOR AND A THERMOELECTRIC BREAKER

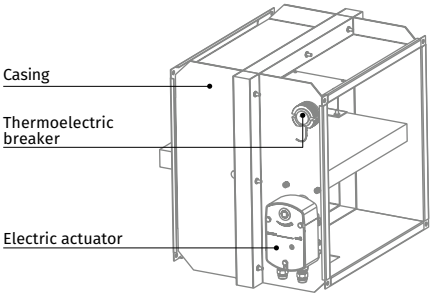

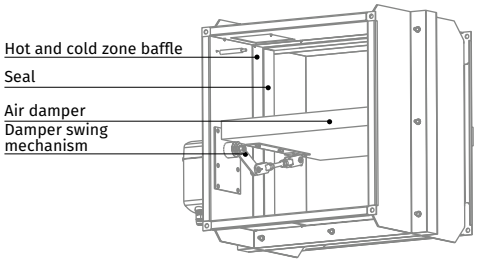

THE BSK2...PNP...S/BSK2...PVP...S/BSK2...PSP...S FIRE SAFETY DAMPER WITH AN ELECTRIC ACTUATOR AND A THERMOELECTRIC BREAKER

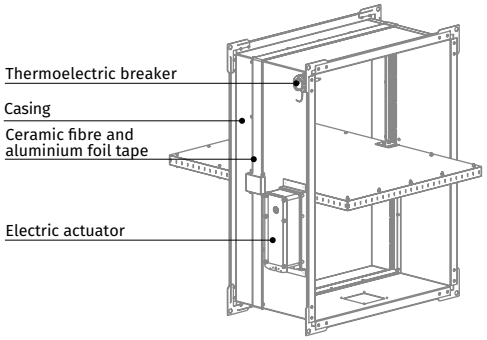

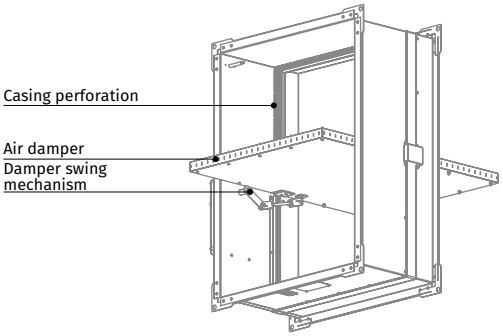

Mounting

- The damper must be installed into the building envelope structure in accordance with the applicable standards and regulations. The seal fire resistance must be at least equal to that of the building envelope.
- The dampers can be installed in any position in vertical and horizontal ducts of fire-protection structures. The ducts for damper installation must be made in such a way so as to prevent the transfer of loads caused by the fire-protection structures to the damper casing. The adjoining air duct must be suspended in such a way so as to prevent the transfer of air duct load to the damper flange. The minimum free space for accessing the control parts must be at least 350 mm. Make sure to arrange an inspection hole. While carrying out the installation consider size K. When two or more dampers are installed into the same fire-protection separation structure, the distance between the two adjacent dampers must be at least 200 mm.
- If such installation is not possible, the damper casing part between the fire-protection separation space and the damper flap must be insulated with a suitable material pursuant to the applicable standards. If such installation is not possible, the damper casing part between the fire-protection separation structure and the damper flap must be insulated with a suitable material pursuant to the applicable standards.
- The damper casing must not deform any deformation during embedding. After the installation the flap must not catch against the damper casing while opening or closing. The fire safety damper can be integrated into a tight wall structure – e.g. made of conventional concrete work of minimum width W = 100 mm or into a plasterboard wall of the necessary fire resistance class or into a tight ceiling structure – e.g. made of conventional concrete of minimum width W = 150 mm. Do not use any foaming substances for sealing the damper in the separation structure.

INSTALLATION RECOMMENDATIONS FOR BSK2...72S DAMPERS WITH A THERMAL FUSE AND A RETURN SPRING

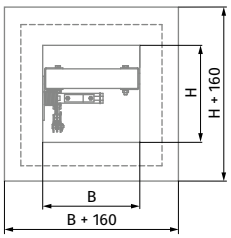

For Sizes B and H please refer to the dimension table

IN VERTICAL BUILDING STRUCTURES

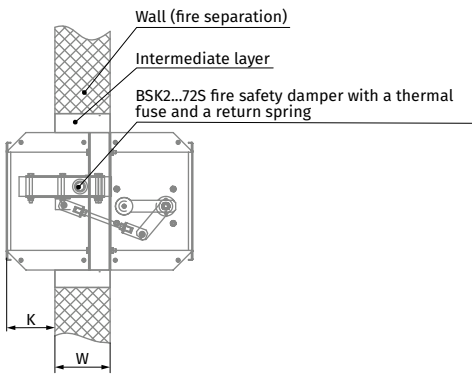

IN HORIZONTAL BUILDING STRUCTURES

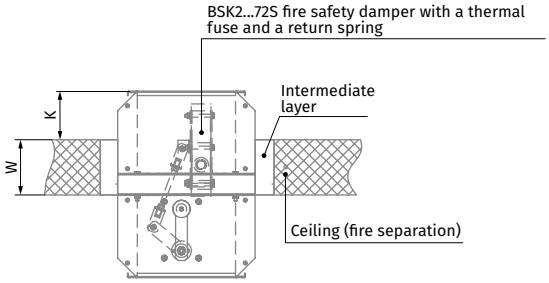

INSTALLATION RECOMMENDATIONS FOR BSK2...PNP/ BSK2...PVP/ BSK2...PSP FIRE SAFETY DAMPERS WITH AN ELECTRIC ACTUATOR AND A THERMOELECTRIC BREAKER

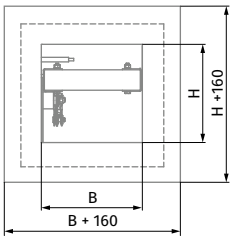

For Sizes B and H please refer to the dimension table

IN HORIZONTAL BUILDING STRUCTURES

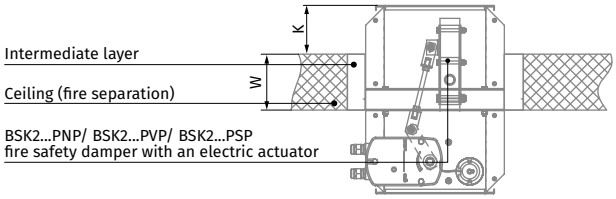

IN VERTICAL BUILDING STRUCTURES

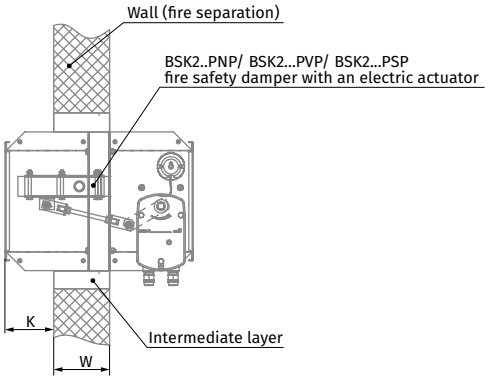

DUCT MODIFICATION WITH AN AIR DUCT

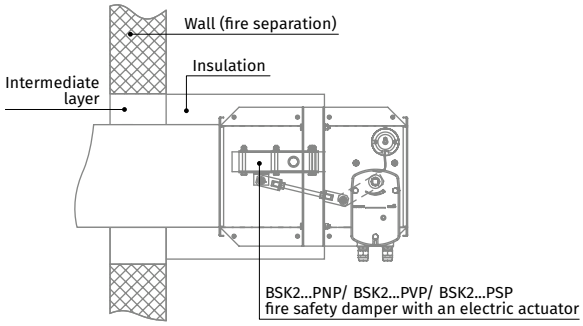

INSTALLATION RECOMMENDATIONS FOR BSK2...PNP...S/ BSK2...PVP...S/BSK2...PSP...S FIRE SAFETY DAMPERS WITH AN ELECTRIC ACTUATOR AND A THERMOELECTRIC BREAKER

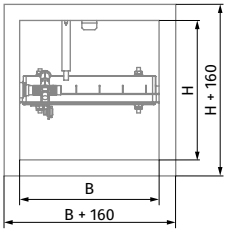

For Sizes B and H please refer to the dimension table

IN VERTICAL BUILDING STRUCTURES

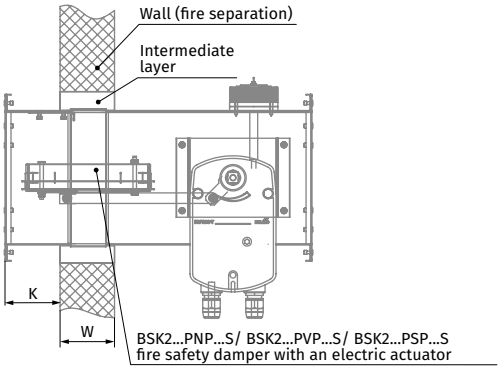

DUCT MODIFICATION WITH AN AIR DUCT

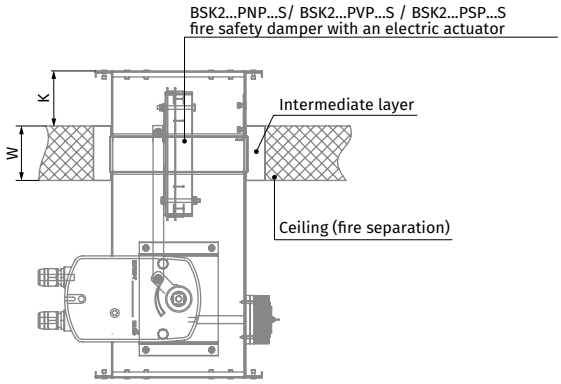

Overall and connecting dimensions

BSK2...72S DAMPERS WITH A MECHANICAL ACTUATOR

Duct cross-section	Dimensions [mm]									Weight [kg]
	B	B1	B2	B3	H	H1	H2	H3	S	
BSK2 20x20/2 72S	200	220	240	280	200	220	240	280	315	12
BSK2 25x20/2 72S	250	270	290	330	200	220	240	280	365	13
BSK2 25x25/2 72S	250	270	290	330	250	270	290	330	365	14.1
BSK2 30x20/2 72S	300	320	340	380	200	220	240	280	415	14
BSK2 30x25/2 72S	300	320	340	380	250	270	290	330	415	15.3
BSK2 30x30/2 72S	300	320	340	380	300	320	340	380	415	18.8
BSK2 40x25/2 72S	400	420	440	480	250	270	290	330	515	19.2
BSK2 40x30/2 72S	400	420	440	480	300	320	340	380	515	19.7
BSK2 40x40/2 72S	400	420	440	480	400	420	440	480	515	22
BSK2 50x30/2 72S	500	520	540	580	300	320	340	380	615	22.5
BSK2 50x40/2 72S	500	520	540	580	400	420	440	480	615	24.7
BSK2 50x50/2 72S	500	520	540	580	500	520	540	580	615	29.8
BSK2 60x40/2 72S	600	620	640	680	400	420	440	480	715	29.7
BSK2 60x50/2 72S	600	620	640	680	500	520	540	580	715	36
BSK2 60x60/2 72S	600	620	640	680	600	620	640	680	715	38

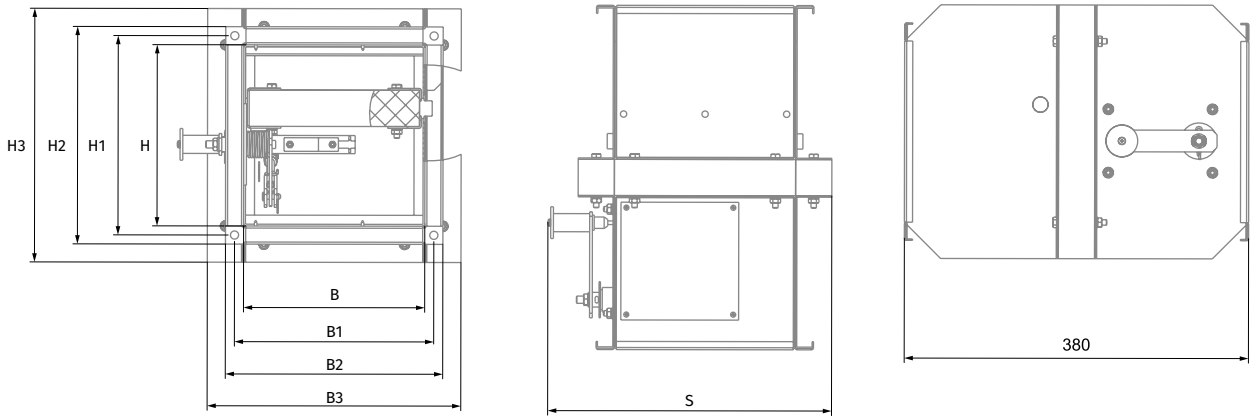

FLOW AREA OF FIRE-RESISTING DUCT DAMPER WITH MECHANICAL ACTUATOR [M²]

B/H [mm]	200	250	300	400	500	600
200	0.032					
250	0.04	0.053				
300	0.048	0.063	0.078			
400	0.064	0.084	0.104	0.144		
500	0.08	0.105	0.13	0.18	0.23	
600	0.096	0.126	0.156	0.216	0.276	0.336

Dampers with dimensions not included in the table can be produced on request.
Limit damper size: 600x600 mm.

Overall and connecting dimensions

BSK2...PNP/BSK2...PVP/BSK2...PSP DAMPERS WITH ELECTRIC ACTUATORS

Duct cross-section	Dimensions [mm]									Weight [kg]
	B	B1	B2	B3	H	H1	H2	H3	S	
BSK2 20x20/2 .../O	200	220	240	280	200	220	240	280	340	13.3
BSK2 25x20/2 .../O	250	270	290	330	200	220	240	280	390	14.3
BSK2 25x25/2 .../O	250	270	290	330	250	270	290	330	390	15.4
BSK2 30x20/2 .../O	300	320	340	380	200	220	240	280	440	15.3
BSK2 30x25/2 .../O	300	320	340	380	250	270	290	330	440	16.6
BSK2 30x30/2 .../O	300	320	340	380	300	320	340	380	440	20.1
BSK2 40x25/2 .../O	400	420	440	480	250	270	290	330	540	20.5
BSK2 40x30/2 .../O	400	420	440	480	300	320	340	380	540	21
BSK2 40x40/2 .../O	400	420	440	480	400	420	440	480	540	23.3
BSK2 50x30/2 .../O	500	520	540	580	300	320	340	380	640	23.8
BSK2 50x40/2 .../O	500	520	540	580	400	420	440	480	640	26
BSK2 50x50/2 .../O	500	530	560	580	500	530	560	580	650	33
BSK2 60x40/2 .../O	600	620	640	680	400	420	440	480	740	32.7
BSK2 60x50/2 .../O	600	630	660	680	500	530	560	580	750	38.4
BSK2 60x60/2 .../O	600	630	660	680	600	630	660	680	750	43
BSK2 80x50/2 .../O	800	830	860	880	500	530	560	580	950	47
BSK2 80x60/2 .../O	800	830	860	880	600	630	660	680	950	52
BSK2 80x80/2 .../O	800	830	860	880	800	830	860	880	950	63
BSK2 100x60/2 .../O	1000	1030	1060	1080	600	630	660	680	1150	63
BSK2 100x80/2 .../O	1000	1030	1060	1080	800	830	860	880	1150	75
BSK2 100x100/2 .../O	1000	1030	1060	1080	1000	1030	1060	1080	1150	87

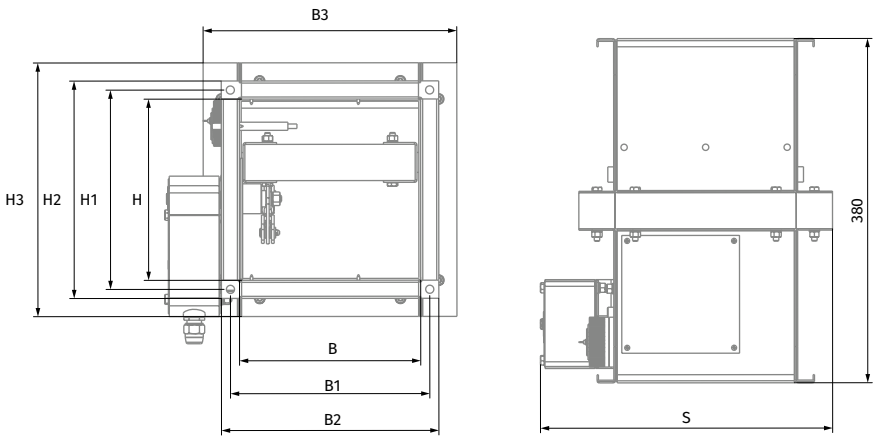

Note: The values given in the table for dampers with 230 V actuators are identical for those equipped with 24 V.

FLOW AREA OF THE DUCT FIRE-RESISTANT DAMPER WITH AN ELECTRIC ACTUATOR INSTALLED OUTSIDE THE DAMPER [M²]

B/H [mm]	200	250	300	400	500	600	800	1000
200	0.032							
250	0.04	0.053						
300	0.048	0.063	0.078					
400	0.064	0.084	0.104	0.144				
500	0.08	0.105	0.13	0.18	0.23			
600	0.096	0.126	0.156	0.216	0.276	0.336		
800	0.128	0.168	0.208	0.288	0.368	0.448	0.608	
1000	0.16	0.21	0.26	0.36	0.46	0.56	0.76	0.96

Dampers with dimensions not included in the table can be produced on request.
Limit damper size: 1000x1000 mm

Overall and connecting dimensions

BSK2...PNP...S/BSK2...PVP...S/BSK2...PSP...S DAMPERS WITH ELECTRIC ACTUATORS:

Duct cross-section	Dimensions [mm]							Weight [kg]
	B	B1	B2	B3	H	H1	H2	
BSK2 20x20/2 .../O S	200	220	240	340	200	220	240	5.7
BSK2 25x20/2 .../O S	250	270	290	390	200	220	240	6.2
BSK2 25x25/2 .../O S	250	270	290	390	250	270	290	6.9
BSK2 30x20/2 .../O S	300	320	340	440	200	220	240	6.8
BSK2 30x25/2 .../O S	300	320	340	440	250	270	290	7.5
BSK2 30x30/2 .../O S	300	320	340	440	300	320	340	9.2
BSK2 40x25/2 .../O S	400	420	440	540	250	270	290	9
BSK2 40x30/2 .../O S	400	420	440	540	300	320	340	10.8
BSK2 40x40/2 .../O S	400	420	440	540	400	420	440	12.6
BSK2 50x30/2 .../O S	500	520	540	640	300	320	340	12.3
BSK2 50x40/2 .../O S	500	520	540	640	400	420	440	14.3
BSK2 50x50/2 .../O S	500	530	560	650	500	530	560	23
BSK2 60x40/2 .../O S	600	620	640	740	400	420	440	16.2
BSK2 60x50/2 .../O S	600	630	660	750	500	530	560	25.6
BSK2 60x60/2 .../O S	600	630	660	750	600	630	660	28.6
BSK2 80x50/2 .../O S	800	830	860	950	500	530	560	31.3
BSK2 80x60/2 .../O S	800	830	860	950	600	630	660	34.7
BSK2 80x80/2 .../O S	800	830	860	950	800	830	860	42
BSK2 100x60/2 .../O S	1000	1030	1060	1150	600	630	660	40.7
BSK2 100x80/2 .../O S	1000	1030	1060	1150	800	830	860	50.2
BSK2 100x100/2 .../O S	1000	1030	1060	1150	1000	1030	1060	58

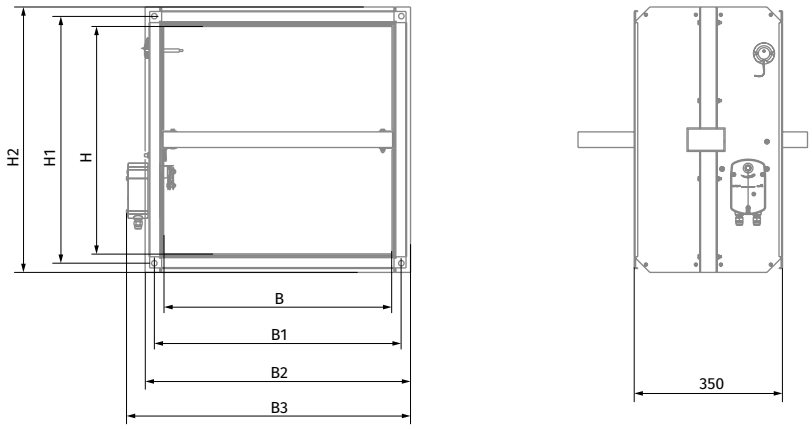

Note: The values given in the table for dampers with 230 V actuators are identical for those equipped with 24 V.

FLOW AREA OF THE DUCT FIRE-RESISTANT DAMPER WITH AN ELECTRIC ACTUATOR INSTALLED OUTSIDE THE DAMPER [M²]

B/H [mm]	200	250	300	400	500	600	800	1000
200	0.032							
250	0.04	0.053						
300	0.048	0.063	0.078					
400	0.064	0.084	0.104	0.144				
500	0.08	0.105	0.13	0.18	0.23			
600	0.096	0.126	0.156	0.216	0.276	0.336		
800	0.128	0.168	0.208	0.288	0.368	0.448	0.608	
1000	0.16	0.21	0.26	0.36	0.46	0.56	0.76	0.96

Dampers with dimensions not included in the table can be produced on request.
Limit damper size: 1000x1000 mm

Technical data

BELIMO ELECTRIC ACTUATORS WITH A RETURN SPRING AND A THERMAL BREAKER (PVP)

Parameters	Basic models		Models with increased torque		Models with the highest torque	
Nominal voltage [V]	AC/DC 24	AC 230	AC/DC 24	AC 230	AC/DC 24	AC 230
Nominal voltage range [V]	AC 19.2…28.8 DC 21.6…28.8	AC 198…264	AC 19.2…28.8 DC 21.6…28.8	AC 198…264	AC 19.2…28.8 DC 21.6…28.8	AC 198…264
Nominal voltage frequency AC [Hz]	50/60					
Power consumption in rest position [W]	0.8	1.1	1.4	2.1	2	3
Power consumption in operation [W]	2.5	3.5	4	5	7	8.5
Power consumption for wire sizing [VA]	4	6.5	6	10	10	11
Motor torque [Nm]	4		9		18	
Spring torque [Nm]	3		7		12	
Protection class	III	II	III	II	III	II
Degree of protection	IP54					
Auxiliary switches	2 pcs., single-pole, reversible, 1 mA…3(0.5) A, AC 250 V				2 pcs., single-pole, reversible, 1 mA…6(3) A, AC 250 V	
Electric motor connection cable	1 m, 2 x 0.75 mm² (halogen-free)					
Auxiliary switch connection cable	1 m, 6 x 0.75 mm² (halogen-free)					
Running time spring	20 seconds at -10…+55 °C < 60 seconds at -30…-10 °C		20 seconds at -10…+55 °C < 60 seconds at -30…-10 °C		16 seconds at +20 °C	
Running time motor	< 60 s/90°		< 60 s/90°		< 120 s/90°	
Response temperature of thermal fuse	Duct outside temperature 72 °C Duct inside temperature 72 °C					
Service life	Min. 60 000 emergency positions					
Technical maintenance	Not required					

NENUTEC ELECTRIC ACTUATORS WITH A RETURN SPRING AND A THERMAL BREAKER (PNP)

Parameters	Basic models		Models with increased torque		Models with the highest torque	
Nominal voltage [V]	AC/DC 24	AC 230	AC/DC 24	AC 230	AC/DC 24	AC 230
Nominal voltage range [V]	AC/DC 21.8…26.4	AC 209…253	AC/DC 21.8…26.4	AC 209…253	AC/DC 21.8…26.4	AC 209…253
Nominal voltage frequency AC [Hz]	50/60					
Power consumption in rest position [W]	3.5		3.5		8	
Power consumption in operation [W]	5		5		12	
Power consumption for wire sizing [VA]	7		7		14	
Motor torque [Nm]	5		8		20	
Spring torque [Nm]	5		8		20	
Protection class	III	II	III	II	III	II
Degree of protection	IP54					
Auxiliary switches	2 pcs., single-pole, reversible, 3 (1.5) A, AC 250 V					
Electric motor connection cable	1 m, 2 x 0.75 mm² (halogen-free)					
Auxiliary switch connection cable	1 m, 6 x 0.75 mm² (halogen-free)					
Running time	< 70 s (return spring < 25 s)		< 120 s (return spring < 25 s)		< 70 s (return spring < 35 s)	
Service life	Min. 60 000 safety positions					
Response temperature of thermal fuse	Duct outside temperature 72 °C Duct inside temperature 72 °C					

SIEMENS ELECTRIC ACTUATORS WITH A RETURN SPRING AND A THERMAL BREAKER (PSP)

Parameters	Basic models		Models with increased torque		Models with the highest torque	
Nominal voltage [V]	AC 24/DC 24...48	AC 230	AC 24/DC 24...48	AC 230	AC 24/DC 24...48	AC 230
Nominal voltage range [%]	AC/DC ±20	AC ±15	AC/DC ±20	AC ±15	AC/DC ±20	AC ±15
Nominal voltage frequency AC [Hz]	50/60					
Power consumption in rest position [W]	2	3.5	2	3.5	3	4
Power consumption in operation [W]	3.5	4.5	3.5	4.5	5	6
Power consumption for wire sizing [VA]	5	7	5	7	7	8
Motor torque [Nm]	4		9		18	
Spring torque [Nm]	4		7		18	
Protection class	III	II	III	II	III	II
Degree of protection	IP54					
Auxiliary switches	2 pcs., single-pole, reversible, 6(2) A, AC 24...250 V					
Electric motor connection cable	0.9 m, 2 x 0.75 mm² (halogen-free)					
Auxiliary switch connection cable	0.9 m, 6 x 0.75 mm² (halogen-free)					
Running time spring	15 seconds < 60 seconds at -30...-10 °C					
Running time motor	90 s/90°					
Response temperature of thermal fuse	Duct outside temperature 72 °C Duct inside temperature 72 °C					
Service life	10 000 emergency positions					
Technical maintenance	Not required					

Electrical connection

BASIC MODELS BELIMO AND NENUTEC ELECTRIC ACTUATORS. BELIMO AND NENUTEC MODELS WITH INCREASED TORQUE

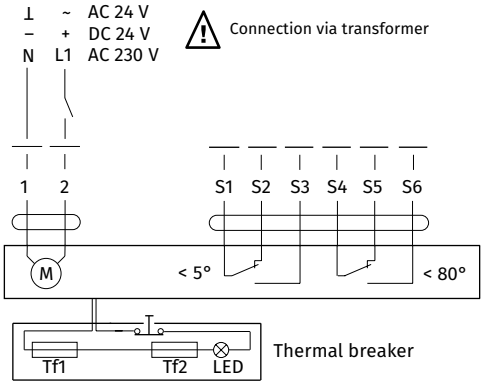

BELIMO ELECTRIC ACTUATORS WITH THE HIGHEST TORQUE. SIEMENS ELECTRIC ACTUATORS

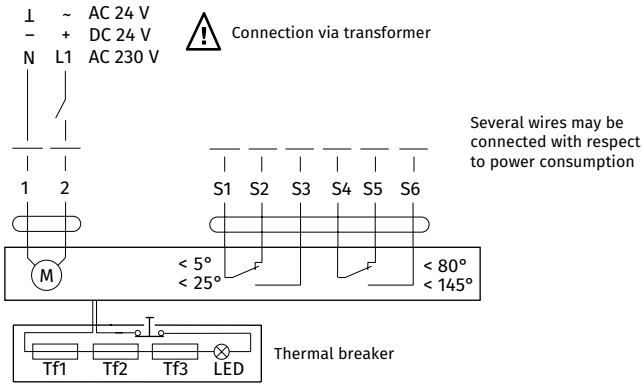

Suitability of actuators in BSK2 valves

B/H [mm]	100	150	200	250	300	350	400	450	500	550	600	650	700	750	800	850	900	950	1000
100	0.010	0.015	0.020	0.025	0.030	0.035	0.040	0.045	0.050	0.055	0.060	0.065	0.070	0.075	0.080	0.085	0.090	0.095	0.100
150	0.015	0.023	0.030	0.038	0.045	0.053	0.060	0.068	0.075	0.083	0.090	0.098	0.105	0.113	0.120	0.128	0.135	0.143	0.150
200	0.020	0.030	0.040	0.050	0.060	0.070	0.080	0.090	0.100	0.110	0.120	0.130	0.140	0.150	0.160	0.170	0.180	0.190	0.200
250	0.025	0.038	0.050	0.063	0.075	0.088	0.100	0.113	0.125	0.138	0.150	0.163	0.175	0.188	0.200	0.213	0.225	0.238	0.250
300	0.030	0.045	0.060	0.075	0.090	0.105	0.120	0.135	0.150	0.165	0.180	0.195	0.210	0.225	0.240	0.255	0.270	0.285	0.300
350	0.035	0.053	0.070	0.088	0.105	0.123	0.140	0.158	0.175	0.193	0.210	0.228	0.245	0.263	0.280	0.298	0.315	0.333	0.350
400	0.040	0.060	0.080	0.100	0.120	0.140	0.160	0.180	0.200	0.220	0.240	0.260	0.280	0.300	0.320	0.340	0.360	0.380	0.400
450	0.045	0.068	0.090	0.113	0.135	0.158	0.180	0.203	0.225	0.248	0.270	0.293	0.315	0.338	0.360	0.383	0.405	0.428	0.450
500	0.050	0.075	0.100	0.125	0.150	0.175	0.200	0.225	0.250	0.275	0.300	0.325	0.350	0.375	0.400	0.425	0.450	0.475	0.500
550	0.055	0.083	0.110	0.138	0.165	0.193	0.220	0.248	0.275	0.303	0.330	0.358	0.385	0.413	0.440	0.468	0.495	0.523	0.550
600	0.060	0.090	0.120	0.150	0.180	0.210	0.240	0.270	0.300	0.330	0.360	0.390	0.420	0.450	0.480	0.510	0.540	0.570	0.600
650	0.065	0.098	0.130	0.163	0.195	0.228	0.260	0.293	0.325	0.358	0.390	0.423	0.455	0.488	0.520	0.553	0.585	0.618	0.650
700	0.070	0.105	0.140	0.175	0.210	0.245	0.280	0.315	0.350	0.385	0.420	0.455	0.490	0.525	0.560	0.595	0.630	0.665	0.700
750	0.075	0.113	0.150	0.188	0.225	0.263	0.300	0.338	0.375	0.413	0.450	0.488	0.525	0.563	0.600	0.638	0.675	0.713	0.750
800	0.080	0.120	0.160	0.200	0.240	0.280	0.320	0.360	0.400	0.440	0.480	0.520	0.560	0.600	0.640	0.680	0.720	0.760	0.800
850	0.085	0.128	0.170	0.213	0.255	0.298	0.340	0.383	0.425	0.468	0.510	0.553	0.595	0.638	0.680	0.723	0.765	0.808	0.850
900	0.090	0.135	0.180	0.225	0.270	0.315	0.360	0.405	0.450	0.495	0.540	0.585	0.630	0.675	0.720	0.765	0.810	0.855	0.900
950	0.095	0.143	0.190	0.238	0.285	0.333	0.380	0.428	0.475	0.523	0.570	0.618	0.665	0.713	0.760	0.808	0.855	0.903	0.950
1000	0.100	0.150	0.200	0.250	0.300	0.350	0.400	0.450	0.500	0.550	0.600	0.650	0.700	0.750	0.800	0.850	0.900	0.950	1.000

Basic models Models with increased torque Models with the highest torque